SESSION TIME 20 MINUTES

K5R

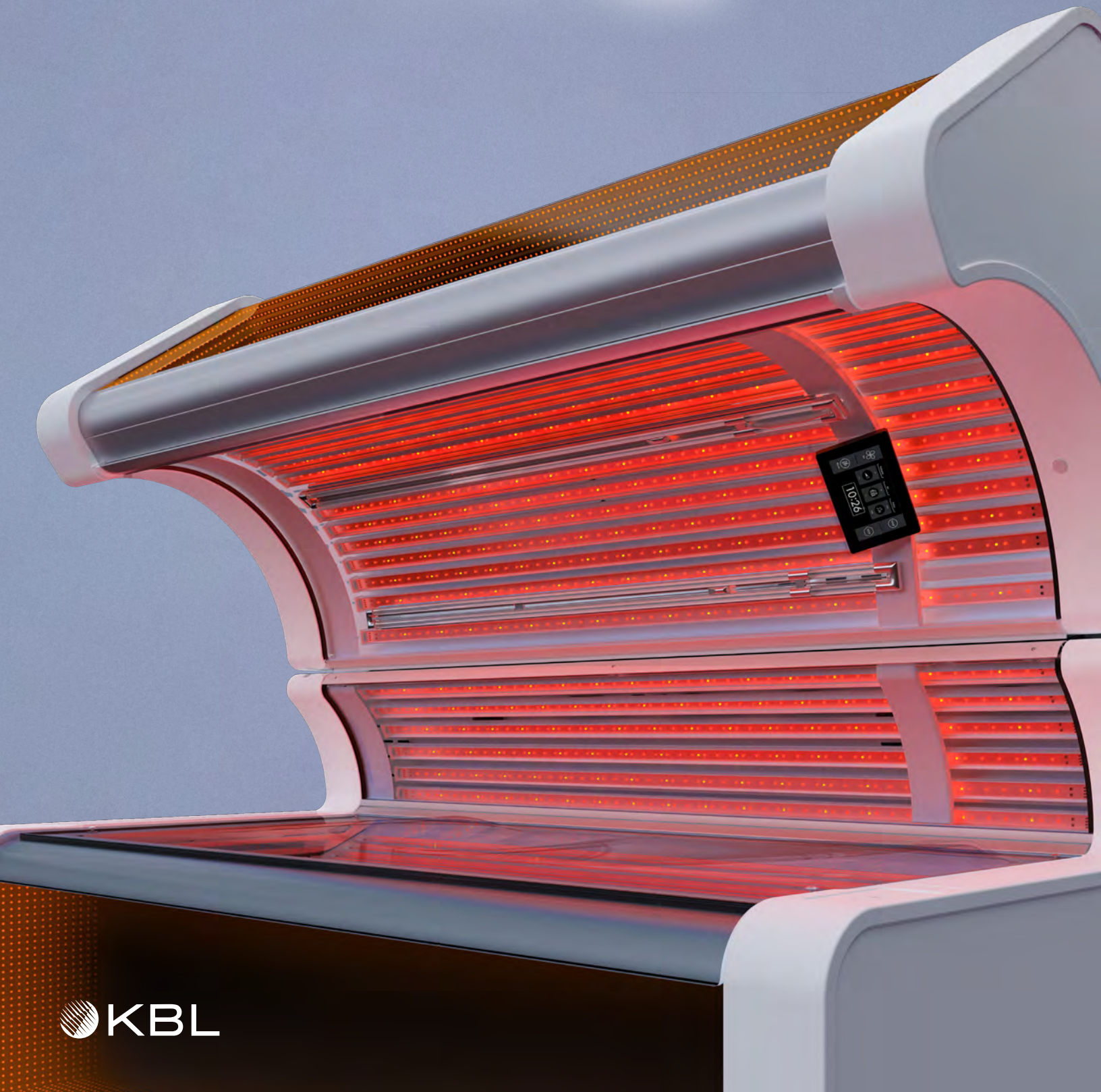

KBL

K5R

Power consumption:	5,0 kW
Weight:	approx. 1170 lbs
Bed pane:	max. load capacity: 330 lbs

ELECTRICAL INFORMATION

Protective class:	IP20
Mains voltage:	3-phase operation: 220 V / 3~ / 60 Hz | 2-phase operation: 220 V / 2~ / 60 Hz
Wire cross section:	3-phase operation: 4 x AWG10 | 2-phase operation: 3 x AWG8
Circuit breakers:	3-phase operation: 3 x 25 A | 2-phase operation: 2 x 35 A

MEASUREMENTS
in inches (HEIGHT x WIDTH x LENGTH)

76.7" x 51.2" x 90.6" (open)
55.0" x 51.2" x 90.6" (closed)

Wall clearance: 3.9"

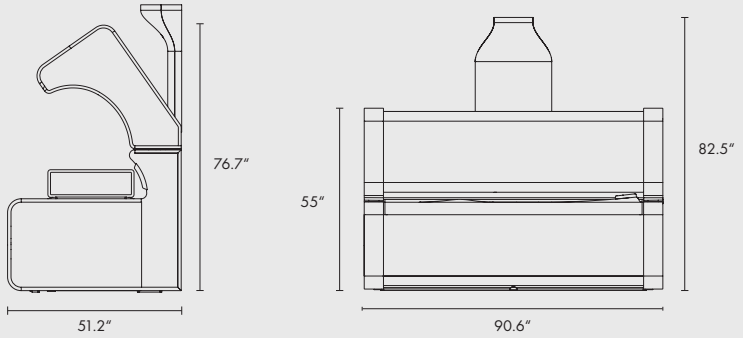

EQUIPMENT*



LED Tubes · AirBreeze Face · AirBreeze Body · 7" Smart Control · Video Player · Infinity Mirror · LED lighting · Voice Assist · 3D Sound System · Web Radio



Bluetooth · Wireless Charging · KBL 8 · Ethernet · WIFI

*Fully equiped

KBL

Errors and omissions possible. KBL reserves the right to change technical data or specifications without notice · www.kbl-usa.com
Contraindication: This product is contraindicated for use on persons under the age of 18 years. Contraindication: "Do not use over the breast or stomach of a breast-feeding or pregnant person. Do not use if the patient or administrator has epilepsy or a history of seizures. Avoid using when the patient is taking cortisone injections or any other kind of steroid injection(s). Avoid use if the patient is using photosensitizing drugs. Do not perform LED therapy over known cancer tumor or metastasis. Do not use on persons with pacemakers. Do not use on persons with lack of normal sensation on areas of the body."