KBL

5600 α



TANNING DEVICE

OPERATING INSTRUCTIONS

Copyright and Trademark

© Copyright 2019 KBL GmbH

This documentation only covers products manufactured by KBL GmbH. It must not be duplicated, photocopied, translated or stored without prior special consent by KBL GmbH. Duplication on electronic media or in a machine readable form, either in whole or in part, is also prohibited.

KBL is a registered trademark of KBL GmbH.

DISCLAIMER

All information given in this document correspond to the status quo at the date of publication but may be subject to changes. Therefore, we do not accept any liability for, nor do we guarantee the accuracy and/or completeness of the information.

EXPORT

Technical equipment and versions of the devices are in accordance with the legal prescriptions of the respective country of destination. Export to the European Union of the KBL products, listed in this guide, or operation of the systems in these countries, are not permitted. KBL does not accept any manufacturers liability in case this direction is not adhered to. It is expressly pointed out that any violation of the export/operation prohibition will involve substantial risks of liability for the exporter and/or operator.

ORIGINAL OPERATING INSTRUCTIONS
Version: BA-5600mod2010-TSU_C-en-us
Date: May 2019
Item no: 0100036594
Tanning Device name [tech.]: 4209

MANUFACTURER
KBL GmbH
Ringstraße 24-26 · 56307 Dernbach · Germany

DISTRIBUTED BY (CONTACT)
Tanning Supplies unlimited
1504 Sadlier Circle South Drive
Indianapolis; IN 46239
1-877-307-8434 (toll free) or 317-217-1700

Contents

1. General information 5
1.1 About these instructions 5
1.2 Safety signs 5
1.3 Signal words 5
1.4 Definitions 6
1.5 Transport 6
1.6 Environmental regulations 6
1.7 Service 7
1.8 Updating system software 7
1.9 Setup location 7
1.10 Commissioning 8
1.11 Obligations of the studio operator 8
1.12 Training of staff 9
1.13 Technical modifications 9
1.14 Instruction updates 9

2. Safety notes 10
2.1 General safety notes 10
2.2 Duties of the operator 10
2.3 Intended use 11
2.4 Indications for use 11
2.5 Contraindications 11
2.6 Warnings 11
2.7 Foreseeable misuse 11
2.8 Timer controlled operation 12
2.9 Guidelines for the use of prot. eyewear 12
2.10 Freeing a trapped person 12
2.11 Wearing a hair net ..... n/a
2.12 Use of headphones 13
2.13 Lamp breakage 13
2.14 Plug connections ..... n/a
2.15 Exhaust air connection ..... n/a

3. Description of the tanning device 14
3.1 Standards 14
3.2 Components 18
3.3 Exhaust air modes ..... n/a

4. Connections 19
4.1 Class I ME equipment 19
4.2 Overview supply connections ..... n/a
4.3 Connecting the mains voltage 19
4.4 Connecting an external audio source 20
4.5 Level adjustment studio music signal 20
4.6 Operation using different audio sources 20
4.7 Bluetooth connection 21
4.8 Connecting the channel selection 22
4.9 Connecting the external timer 23
4.10 aquaCool and Aroma connections 24
4.11 aquaCool-box connections ..... n/a
4.12 Connections aquaCool box /tower ..... n/a

5. Start-up 25
5.1 Operating modes 25

6. Tanning instructions 26
6.1 Instructions for the user 26
6.2 Exposure schedule 28

7. Tanning mode 29
7.1 Pre selection ..... n/a
7.2 Starting the tanning session 29
7.3 Operation during the tanning session 29
7.4 Basic functions 31
7.5 Variable section of the interior control panel 31

8. Standby mode 33
8.1 Service mode 33
8.2 beautyBoosters in standby mode ..... n/a
8.3 Standby functions 33
8.4 Set decorative lighting 34

9. Maintenance and cleaning 35
9.1 Instructions on cleaning, disinfection and care 37
9.2 Maintenance intervals 39
9.3 Tools and aids 40
9.4 Unlocking the bed 40
9.5 Acrylic panes 41
9.6 Filter panes 43
9.7 Tubes 45
9.8 P2 Tubes 45
9.9 Facial tanners 46
9.10 Shoulder tanner ..... n/a
9.11 Interior unit lighting 47
9.12 Filter cartridges 47
9.13 Canopy drive ..... n/a
9.14 Ventilation and air-conditioning 48
9.15 Recording to an SD card 49
9.16 Aroma- and aquaCool 50
9.17 Replacing the aquaCool canister ..... n/a
9.18 Replacing the aquaCool nozzles 51

10. System messages 52

11. Technical data 54
11.1 Dimensions and distances 56
11.2 Labels attached to the tanning device 57

12. IMPLIED WARRANTY 58

13. WARRANTY CARD 59

1. General information

1.1 About these instructions

This operating manual is intended for use by

- studio operator,
- user,
- staff,
- qualified, trained and authorized service technician.

Any person dealing with this KBL Sunlamp Product (hereafter referred to as tanning device) must have read and understood these instructions.

This manual describes tanning devices equipped with the maximum number of features.

Keep this manual ready to hand at all times.

1.2 Safety signs

	This symbol indicates that general hazards exist for the human health.
	This symbol indicates that due to electrical tensions hazards exist to the human health.
	This symbol indicates that due to UV radiation hazards exist to the human health.
	This symbol indicates that due to falling loads hazards exist to the human health.
	This symbol indicates the danger of pinching. When closing and opening panels and covers, you can pinch your hands.
	This symbol indicates the danger of burns from hot lamps and housing parts. If the tanning device was operated before being switched off and opened, lamps and housing parts may be hot.
	This symbol indicates that damages may occur at the tanning device, at the material or at the environment.
	This symbol indicates the type BF applied part.

IMPORTANT INFORMATION

	This symbol does not identify safety notices, but states information for a better understanding.

1.3 Signal words

DANGER

- Death or serious injury is imminent.

WARNING

- Death or serious injury is possible.

CAUTION

- Moderate or minor injury is possible.

1.4 Definitions

STUDIO OPERATOR

People who provide tanning devices to users on a commercial basis. The studio operator is trained to operate and maintain the tanning device. He is responsible for the proper operation of the tanning device as well as for compliance with the maintenance intervals.

USER

A person who uses the tanning device.

STAFF

People who are responsible for the operation, cleaning and disinfection as well as for the general maintenance work and instruction of the user on how to operate the tanning devices.

QUALIFIED, TRAINED AND AUTHORIZED SERVICE TECHNICIAN

Qualified staff who have been trained and authorized by the manufacturer for assembly and maintenance work with specific device.

1.5 Transport

	⚠ WARNING **Overturning load** Danger of being crushed by heavy parts of the equipment. • Keep the safety distance to the transport machine. • Do not walk under the load. • Wear safety shoes.

TRANSPORT BY FORKLIFT TRUCK

	During transport the tanning device may be damaged when using forklift forks that are too short. • Use only sufficiently long forks.

The tanning device is mounted on a pallet.

- Insert the forks carefully into the openings of the pallet.
- Lift the load by a few centimeters.
- Transport the load carefully to the place of installation.

OTHER MODES OF TRANSPORT

If a forklift truck cannot be used for transport, the tanning device must be partially disassembled and the parts must be transported individually to the place of installation, e.g. using a dolly. Depending on the weight of the components, lifting them might require several people.

1.6 Environmental regulations (disposal of lamps)

Fluorescent lamps contain fluorescent materials and other waste products containing mercury. Some areas of the USA and Canada have specific regulations regarding disposal of these waste. Please check the laws in your area and act in accordance with municipal waste regulations. Please retain proof of proper disposal of lamps. Your local regulatory agency can assist you with the disposal of lamps. Report the number of lamps to your local agency by telephone or in writing. The regulatory agency can provide you with a delivery point for your lamps or will take care, in conjunction with a disposal company, of the collection and proper disposal of the lamps (Fees for this may apply). Please contact your code enforcement officials for more information regarding laws governing disposal of these components in your area.

1.7 Service

REPAIRS - SERVICE - REPLACEMENT - PARTS AND LAMPS - EYE PROTECTION

If you are in need of any of the above mentioned products or services, you should contact:

Tanning Supplies unlimited
1504 Sadlier Circle South Drive
Indianapolis; IN 46239
1-877-307-8434 (toll free) or 317-217-1700

NOTE: All repairs and replacement components including, but not limited to protective eyewear, lamps, timers and acrylic must be in compliance with CFR 21 1040.20.

ACCESSORY PARTS

Description	KBL item no.
Protective eyewear	3010104000
Headrest	3010212010

Technical documentation like operating and assembly instructions as well as diagrams and original spare parts can be provided by KBL.

1.8 Updating system software



Risk of damage by switching off the power supply voltage.

Disconnecting power supply during the update process, will lead to damage of electronic components.

- Make sure that the tanning device is not disconnected from the power supply voltage during the update.

To accomplish the update download the “USB-Connect” software offered by KBL. For detailed information press the help-button in the main menu.

1.9 Setup location

OPERATION IN MOBILE FACILITIES



CAUTION

Crushing hazard caused by sudden movements

The tanning device is unsuitable for operation in mobile facilities (buses, trains, ships).

- The tanning device must be adapted in order to ensure trouble-free operation when used in mobile facilities.

DANGER OF OVERHEATING BY OBSTRUCTION OF THE AIRFLOW

Avoid in any case a change, obstruction or blockage of the air inflow and outflow area to the tanning device or to make any unauthorized changes to the tanning device. The manufacturer shall bear no liability for damage or injuries resulting from such actions.

- Comply with the ventilation information to avoid serious system malfunctions.
- Only use OEM spare parts of the same type! The use of other parts will void the manufacturer’s warranty!
- Maintain the minimum distances from ceiling, bottom and the walls! Dimensions are given in chapter *technical data*.



Insufficient air supply leads to overheating which may result in damaging the tanning device!

SALTY AIR - CONTAMINATED AIR

Salty air, contaminated air may lead to corrosion of the housing and electrical components. **Damage to the tanning device possible!**

- Do not operate the tanning device in locations with aggressive environmental conditions (e.g. air containing chlorine).
- Do not install the tanning device at swimming pools.

DIFFERENCE IN TEMPERATURE

Risk of damage by switching on the power supply voltage.

When there are great differences in temperature between the transportation route and the installation site the tanning device shall not be put into operation immediately after being set up.

- Before connecting the tanning device to the power supply, wait at least for 2 hours.

1.10 Commissioning

DANGER

Damaged mains power cable

Risk of death or fatal injury due to electric shock when touching a damaged mains power cable.

- Only the manufacturer or specialized companies may replace the mains power cable!

Initial commissioning will be carried out by the manufacturer's own service technicians or by qualified, trained and authorized service technicians. The tanning device will be handed over ready for use.

As studio operator it is your responsibility to observe the electrical regulations applicable at the installation site.

The tanning device incorporates special preventive measures with regard to the electromagnetic compatibility and must be installed and commissioned according to the EMC instructions obtained from this operating instructions.

If the tanning device has not been used for a longer period of time, then it must first be inspected by qualified, trained and authorized service technicians, before being put back into operation again.

1.11 Obligations of the studio operator

- The studio operator is responsible for informing users on possible risks of tanning.
- All danger and safety labels attached to the tanning device must be observed and shall not be removed!
- The tanning device shall only be used when in proper operational condition!
- The studio operator is responsible to ensure that the tanning device is handled properly.
- No safety equipment (e.g. thermal switch) shall be removed, deactivated, or otherwise bypassed as it may impair the safe operation of the tanning device!
- The electrical installation shall have a freely accessible, all-pole disconnecting device (Master switch with clearly labeled On/Off settings, e.g. '0' and 'I' or additional indicator light) fitted externally on the site side.

1.12 Training of staff

The studio operator is obligated to train his staff and to instruct them in the established legal and accident prevention regulations. He must ensure that his staff has understood and observes these instructions. This includes:

- Operating instructions.
- Safety instructions.
- Information regarding intended use and foreseeable misuse.
- Cleaning/disinfection and maintenance instructions.

- The instructions and additional information from the manufacturer must be available to the staff at their workplace. Regularly test your staff's safety consciousness and awareness of the risks, taking into account the operating instructions of the tanning device.
- Make sure that the cleaning/disinfection intervals are complied with, especially the cleaning and disinfection of the tanning device after every use.
- Make sure that your staff provides the customers with appropriate advice, especially regarding tanning times, possible risks and the operation of the tanning device.

1.13 Technical modifications

The tanning device has been constructed in accordance with current safety regulations.
The specifications and illustrations on these instructions are subject to technical modifications which are required in order to improve the tanning device.

- Unauthorized modifications and changes to the tanning device are forbidden.
- Use only OEM spare parts!

1.14 Instruction updates



Use the current tanning device documentation

The tanning device documentation is updated regularly by the manufacturer. Make sure you are using the latest version.

For instruction updates, please contact:

Tanning Supplies unlimited
1504 Sadlier Circle South Drive
Indianapolis; IN 46239
1-877-307-8434 (toll free) or 317-217-1700

2. Safety notes

2.1 General safety notes

Read the operating instructions before using the tanning device.

This tanning device must be operated with an external timer as specified in chapter *Timer controlled operation*.

NOTE: This tanning device is intended to be uses by only one adult person at a time. Therefore, only one (1) pair of protective eyewear is provided with each KBL tanning device. Use protective eyewear whenever the tanning device is operated. Read related operating instructions in chapter *Guidelines for the use of protective eyewear*.

Do not tan more than once in a 48 hour period. Tanning results normally occur after a few sessions and increase after four (4) weeks of regular exposure. Follow the exposure schedule in accordance with your skin type as specified in chapter Exposure schedule. Failure to do so may result in overexposure. However, regardless of how dark an individual may tan on this tanning device, it will not provide adequate protection against overexposure to natural sunlight or UVB tanning devices.

SKIN TYPE II - This is the individual that usually burns easily and severely, tans minimally or lightly and peels.

SKIN TYPE III - Often referred to as „AVERAGE“ complexion. Burns moderately and tans about average.

SKIN TYPE IV - This individual burns minimally, tans easily and above average with each exposure.

SKIN TYPE V - This individual rarely burns, tans easily and substantially.

FURTHER INSTRUCTIONS



WARNING

No modification of this equipment is allowed.

- Follow all instructions given in this manual. In addition to that, observe all applicable statutory provisions and regulations, also those applicable in the country of operation.
- The tanning device may only be installed and assembled by qualified, trained and authorized service technicians.
- Observe all danger signals and safety signs attached to the equipment.
- Safety signs must not be removed, and safety appliances must not be disabled.
- The tanning device may only be operated when in perfect working condition.
- Never operate the tanning device with the outer covering removed or with the acrylic panes removed.
- Pay attention to the load limit of the bed pane (tanning bed devices only).
- The canopy is not designed to carry additional loads. In particular, during installation the canopy must not be charged with additional loads.

2.2 Duties of the operator

The manufacturer cannot be held liable for damages or injuries resulting from improper use of the equipment or non-observance of these operating instructions.
Only use original spare parts, otherwise operating authorization and terms of guarantee will become invalid.

2.3 Intended use

This sunlamp product is a tanning device intended for the tanning of the human skin of an adult person who is in full command of his/her physical, sensorial and mental faculties. Moreover, sufficient knowledge and experience are required.

Wear protective eyewear to block UV radiation during tanning.

Lie down on the bench in a straight position and with physical contact to the bench. Choose a suitable position to reach the interior control panel at all times during the tanning.

2.4 Indications for use

This sunlamp product is an over-the-counter tanning device emitting ultraviolet light in the UVB and UVA region of the spectrum intended for tanning of the human skin of an adult person.

2.5 Contraindications

Any adult person listed here after may not use this sunlamp product. If in doubt consult a physician.

This sunlamp product is contraindicated for use on persons under the age of 18 years.

This sunlamp product must not be used

- if skin lesions or open wounds are present.
- by persons wearing heart pacemakers.
- by persons prone to sunburn (skin type I).
- by persons already suffering from sunburn.
- by persons taking medicines.
- by persons taking photosensitive medications.
- by persons, who had several severe sunburns as children.
- by persons, who are being treated by a physician for conditions associated with photosensitivity.
- by persons, who are prone to freckles.
- by persons with atypical discolored skin areas or/and with more than five atypical moles with a diameter of 5 millimeters or more and persons with more than 16 moles with a diameter greater than or equal to 2 millimeters. If in doubt, consult a physician!
- by persons with naturally red hair color.
- by persons, who do not tan at all or cannot tan without getting sunburn.

2.6 Warnings

- This sunlamp product should not be used on individuals who have had skin cancer or have a family history of skin cancer.
- Persons repeatedly exposed to ultraviolet sunlamp products should be regularly evaluated for skin cancer.

2.7 Foreseeable misuse

- This sunlamp product is not designed to be used by persons with reduced physical, sensory or mental abilities and/or with a lack of experience or insufficient knowledge.
- During the operation no other person shall be in the radiation range of the sunlamp product.
- Children, should be supervised to make sure that they do not use the sunlamp product as a toy.
- The irradiation of animals, especially reptiles.
- Any type of use that differs from the provisions under the chapter *Safety notes* is considered misuse.

2.8 Timer controlled operation

This sunlamp product must be operated with an external timer that is listed in compliance with UL 917.
If the external timer fails, the sunlamp product is automatically switched off by an internal timer after the TE-time of the respective type of sunlamp product.
The maximum tanning time must not be exceeded.

- The exposure times stated in the exposure schedule must be entered at the external timer.
- Information on how to enter the exposure time can be found in the operating instructions of your external timer.

2.9 Guidelines for the use of protective eyewear

Before use, the length of the elastic strap must be adjusted to the required head size. For maximum protection to elevate stray light, the eye protection must fit securely and comfortably on the eyelids. If ther is any stray light from the sides or under the rim of the lens, DO NOT USE this eye protection. Ask the studio staff to recommend an alternative eye protection.
Never use eye protection lenses that are broken, cracked, bleached out, or otherwise damaged.
For cleaning the protective eyewear refer to chapter *Instructions on cleaning, disinfection and care*.

2.10 Freeing a trapped person

PROPER FUNCTION OF CANOPY DRIVE

Regardless of the operating state (stand by or in operation) of the tanning device, the canopy can be opened (lifted) manually from the inside or the outside easily and with very little effort, any time.
The easiest way to open the canopy is using the designated handle which is freely accessible from the inside and the outside of the device.
The canopy drive (lift) mechanism is a purely mechanical function that does not depend on electrical power.

MALFUNCTION OF CANOPY DRIVE

If, during a tanning session, a mechanical defect occurs at the canopy drive, lifting the canopy manually from the inside and from the outside is still possible at any time.
There is no mechanical interlock to prevent lifting the canopy.
However, if the canopy drive fails, a higher effort is required to manually lift the canopy and therefore one or two persons are needed to support the opening process from the outside.

PREVENTIVE MEASURES

- Observe the maintenance instructions for the canopy drive as prescribed in chapter *Maintenance intervals*.
- Look for a quiet and smooth movement of the canopy drive. If unusual noises occur, the canopy drive must be checked by trained service personnel.

2.12 Use of headphones



CAUTION

Hearing damage possible

Using headphones or earphones at high volume may result in permanent hearing damage.

- Do not set the volume too high.

2.13 Lamp breakage



CAUTION

Risk of mercury toxicity

Risk of mercury toxicity after a lamp breakage. Please comply with the following instructions:

- you must immediately disconnect the tanning device from the mains power.
- have children immediately leave the room.
- you must ventilate the room for at least 15 minutes.
- put on disposable gloves.
- open the window first, then collect the glass shards and escaped mercury and put it into a sealable container.
- bring the container to a collection site for waste lamps.

3. Description of the tanning device

3.1 Standards

This tanning device is in conformity with performance standards 21 CFR 1040.20 and the standards for electromagnetic compatibility (EMC):

EN55015; EN55014-1; EN55014-2; EN61000-3-2; EN61000-3-3; EN61000-3-12; EN62233; EN60601-1-2; EN61000-4-2; EN61000-4-4; EN61000-4-5; EN61000-4-6

According to CISPR 11 the electromagnetic emission characteristic of this tanning device is classified in Group1 and Class A.

The emission characteristics of this device make it suitable for use in industrial areas and hospitals (CISPR 11 class A). If it is used in a residential environment (for which CISPR 11 class B is normally required) this device might not offer adequate protection to radio-frequency communication services. The studio operator might need to take mitigation measures, such as relocating or re-orienting the equipment.

See EMC Tables according to 60601-1-2 : 2007

Table 1

Guidance and Manufacturer's Declaration - Electromagnetic Emission		
The tanning device is intended for use in the electromagnetic environment specified below. The studio operator of the tanning device should assure that it is used in such an environment.		
Emission tests	**Compliance**	**Electromagnetic environment - Guidance**
RF emissions according to CISPR 11	Group 1	The tanning device uses RF energy exclusively for its internal FUNCTION. Therefore, its HF emissions are very low and not likely to cause any interference in nearby electronic equipment.
RF emissions according to CISPR 11	Class A	The tanning device is intended for use in facilities other than residential areas, and for facilities that are directly connected to a public low-voltage supply system that also supplies residential buildings.
Harmonics according to IEC 61000-3-2	Class A	
Voltage fluctuations/ flicker emissions according to IEC 61000-3-3	Complies	

Table 2

Guidance and Manufacturer's Declaration – Electromagnetic Immunity to Interference			
The tanning device is intended for use in the electromagnetic environment specified below. The studio operator of the tanning device should assure that it is used in such an environment.			
Immunity tests	**IEC 60601-Test level**	**Compliance level**	**Electromagnetic environment - Guidance**
Electrostatic discharge according to IEC 61000-4-2	+/- 6 kV contact discharge +/- 8 air discharge	+/- 6 kV contact discharge +/- 8 air discharge	Floors should be made of wood or concrete or be covered with ceramic tiles. If floors are covered with synthetic material, the relative humidity needs to be at least 30 %.
Fast transient electrical disturbances/bursts according to IEC 61000-4-4	± 2 kV for power-supply lines ± 1 kV for input and output lines	± 2 kV for power-supply lines ± 1 kV for input and output lines	Mains power quality should be that of a typical commercial or hospital environment.
Surge voltages (surges) according to IEC 61000-4-5	± 1 kV differential mode voltage ± 2 kV common mode voltage	± 1 kV differential mode voltage ± 2 kV common mode voltage	Mains power quality should be that of a typical commercial or hospital environment.
Voltage dips, short interruptions and voltage variations on power-supply input lines according to IEC 61000-4-11	< 5 % U for ½ period (> 95 % dip) 40 % U for 5 periods (60 % dip) 70 % U for 25 periods (30 % dip) < 5 % U for 5 s (> 95 % dip)	< 5 % U for ½ period (> 95 % dip) 40 % U for 5 periods (60 % dip) 70 % U for 25 periods (30 % dip) < 5 % U for 5 s (> 95 % dip)	Mains power quality should be that of a typical commercial or hospital environment. If the studio operator of the tanning device requires continuous operation of the device even in the event of interruptions of the power supply, it is recommended that the tanning device is powered by an uninterrupted power supply unit or by a battery.
Power-frequency (50/60 Hz) magnetic field according to IEC 61000-4-8	3 A/m	30 A/m	Power-frequency magnetic fields should be at levels characteristic of a typical location in a typical commercial or hospital environment.

Table 4

Guidance and Manufacturer's Declaration – Electromagnetic Immunity to Interference			
The tanning device is intended for use in the electromagnetic environment specified below. The studio operator of the tanning device should assure that it is used in such an environment.			
Immunity tests	**IEC 60601- Test level**	**Compliance level**	**Electromagnetic environment - Guidance**
			Portable and mobile RF communications equipment should be used no closer to the tanning devive, including cables, than the recommended separation distance calculated from the equation applicable to the frequency of the transmitter.
Conducted RF disturbances according to IEC 61000-4-6	3 V_{eff} 150 kHz to 80 MHz	3 V_{eff}	$d=0.35\sqrt{P}$ 80 MHz to 800 MHz
Radiated RF disturbances according to IEC 61000-4-3	3 V/m 80 MHz to 2.5 GHz	3 V/m 80 MHz to 2.5 GHz	$d=1.2\sqrt{P}$ 80 MHz to 800 MHz $d=2.3\sqrt{P}$ 80 MHz to 2.5 GHz
			Recommended separation distance: where *P* is the rated power of the transmitter in watts (W) according to the information supplied by the manufacturer of the transmitter, and *d* is the recommended separation distance in meters (m). Field strengths from fixed RF transmitters, as determined by an electromagnetic site survey [a], are lower than the compliance level [b] in all frequency ranges. Interference may occur in the vicinity of equipment marked with the following symbol: 

NOTE 1 At 80 MHz and 800 MHz, the higher value applies.

NOTE 2 These guidelines may not apply in all situations. The propagation of electromagnetic waves is affected by absorption and reflection from structures, objects and people.

[a] Field strengths from fixed transmitters, such as base stations for radio telephones and land mobile radios, amateur radio, AM and FM radio and TV broadcast cannot be predicted theoretically with accuracy. To assess the electromagnetic environment due to fixed RF transmitters, an electromagnetic site survey should be considered. If the measured field strength in the location in which the tanning device is used exceeds the applicable RF compliance level above, The tanning device should be observed to verify normal operation in every location of use. If abnormal performance is observed, additional measures may be necessary, such as reorienting or relocating the tanning device unit.

[b] Over the frequency range from 150 kHz to 80 MHz, field strengths are less than 10 V/m.

Table 6

Recommended separation distances between portable and mobile RF communications equipment and the tanning device			
The tanning device is intended for use in an electromagnetic environment in which radiated RF disturbances are controlled. The studio operator of the tanning device can help prevent electromagnetic interference by maintaining a minimum distance between portable and mobile RF communications equipment (transmitters) and the tanning device, as recommended below, according to the maximum output power of the communications equipment.			
Rated output of the transmitter [W]	**Separation distance according to frequency of transmitter [m]**		
	150 kHz to 80 MHz $d=0.35\sqrt{P}$	80 MHz to 800 MHz $d=1.2\sqrt{P}$	800 MHz to 2.5 GHz $d=2.3\sqrt{P}$
0.01	0.035	0.12	0.23
0.1	0.11	0.38	0.73
1	0.35	1.2	2.3
10	1.1	3.8	7.3
100	3.5	12	23
For transmitters rated at an output power not listed above, the recommended separation distance can be determined using the equation applicable to the respective column, where P is the rated output power of the transmitter in watts (W) according to the information supplied by the transmitter manufacturer.			
NOTE 1 At 80MHz and 800MHz, the separation distance for the higher frequency range applies. NOTE 2 These guidelines may not apply in all situations. The propagation of electromagnetic waves is influenced by absorptions and reflections of buildings, objects and people.			

3.2 Components

The tanning device basically consists of the following components:

- The canopy including 26 tubes, 4 facial tanners and interior control panel.
- The bed part including 16 tubes and the electronic unit. Depending on the model also with optionally available components.

1	Canopy
2	Locking bar with the locks for the canopy pane.
3	Interior control panel
4	Facial tanner
5	Audio console with sound system. (optional equipment)
6	Bed (faceplate)
7	Opening mechanism of the bed part
8	Bed pane
9	aquaCool - nozzles (optional equipment)
10	Canopy pane
11	Air nozzles
12	Decorative lighting

KBL 5600 alpha

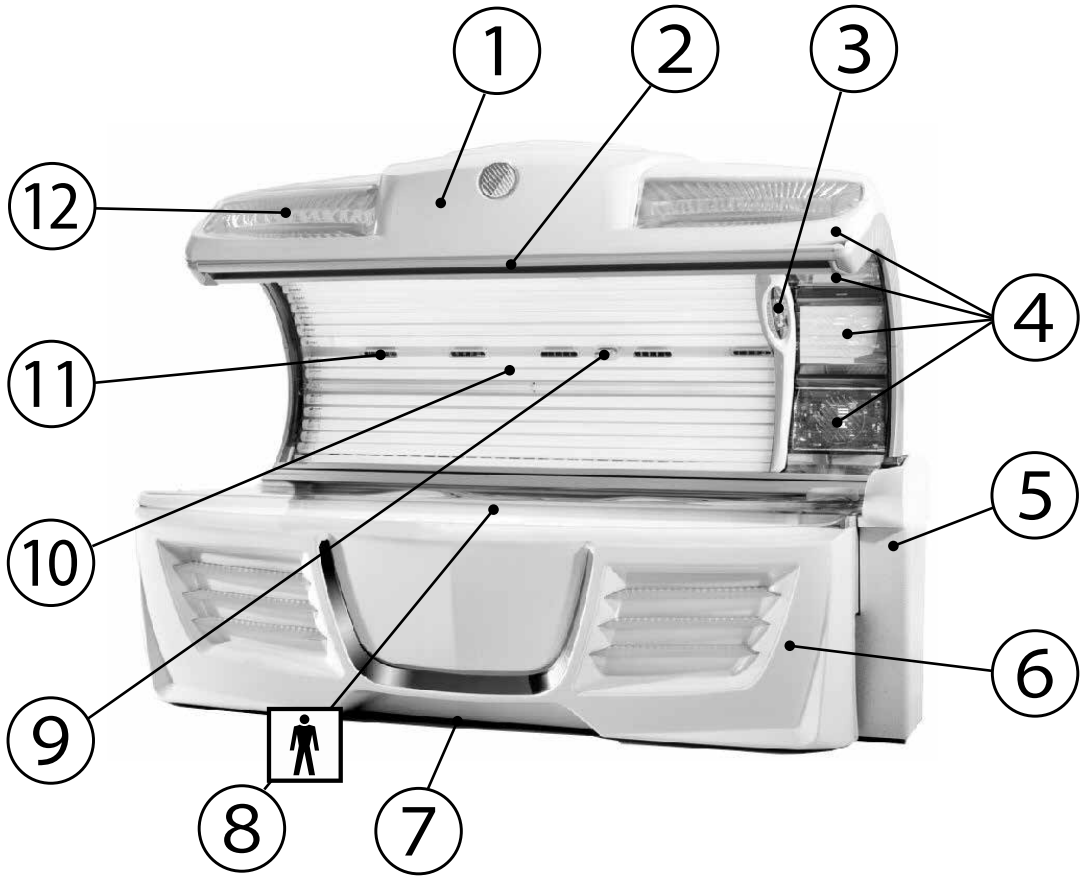

4. Connections

4.1 Class I ME equipment

WARNING

Risk of electric shock

To avoid the risk of electric shock, this equipment must only be connected to a supply mains with protective earth.

4.3 Connecting the mains voltage

DANGER

Live parts

Risk of death or fatal injury due to electric shock when touching live parts.

- Switch neutral
- Secure against reconnection
- Check for neutrality
- Ground and short-circuit
- Cover or shield any adjacent live parts or components

Both the power supply and the related connection work must comply with national standards and local regulations. The connection work and replacement of the power supply cord must only be performed by qualified, trained and authorized service technicians. The connection to the 3 x 220 V mains must be protected by maximum over current protection. For Canada a Class-A ground fault circuit interrupter (GFCI) has to be used. Further information can be found in chapter “Technical data”.

CONNECTION REQUIREMENTS

The electrical installation must be equipped with a freely accessible all-pole disconnecting device in accordance with the overvoltage category III (Master switch with clearly marked on/off settings e.g. “O” and “I” or additional indicator light), fitted externally on the site side. This means that for full separation each pole must have a contact gap according to the conditions of the overvoltage category III. The device shall be capable of being locked in the off-position and shall comply with IEC 60447. A supply main switch must not be incorporated in the power supply cord. A Class-A ground fault circuit interrupter (GFCI) has to be used for Canada. Should the operation of the tanning device cause any interference in the power supply network, e.g. with ripple-control systems (TRA), consult your power supply company to have corresponding blocking elements (audio frequency suppressors) installed.

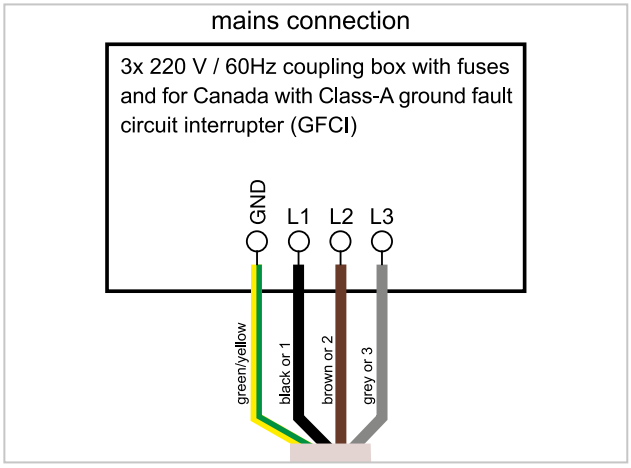

WIRING FOR 3-PHASE OPERATION

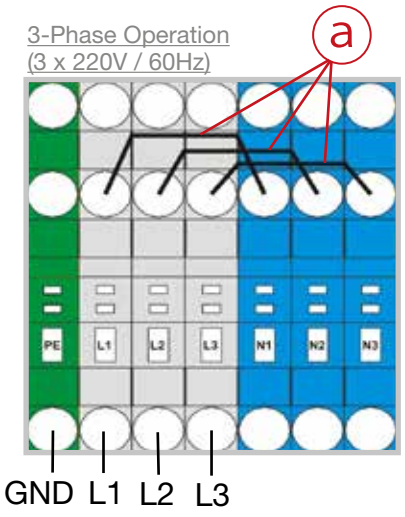

4.4 Connecting an external audio source

When connecting an external audio source (studio music), pay attention to the correct polarity.

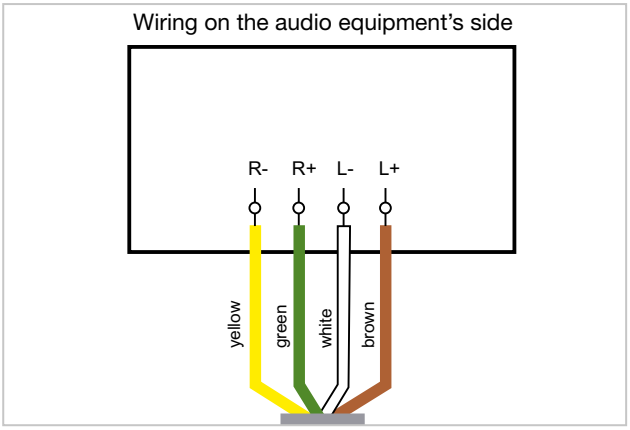

4.5 Level adjustment studio music signal

The voice / audio system components are built in the middle of the bed part (vacuum housing) of the tanning device. The potentiometer which serves of the external audio signal is located on the left side of the housing. To avoid overdrive, select the level adjustment accordingly. The level setting depends on the strength of the external signal and should be carried out by qualified, trained and authorized service technicians. Adjustment of the sound level can only be conducted in the service menu.

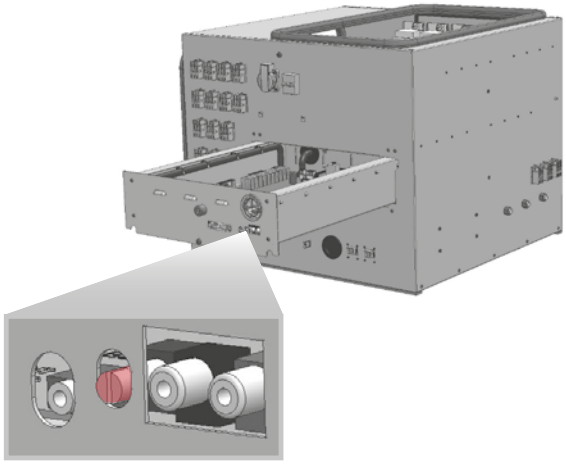

4.6 Operation using different audio sources

The audio source can be changed via the interior control panel.

The tanning device can be operated using the following audio sources:

INTERNAL MP3 PLAYER

When using the internal MP3 player, you can either play the music tracks that are originally supplied on the SD card, or you can record your own tracks to the SD card.

EXTERNAL AUDIO SOURCES

LINE-IN

As an external audio source, you can connect devices ranging from the standard-line level to low loudspeaker levels.

These sources comprise:

- Studio music
- External players such as MP3 players, mobile phones (cell phones), I-pods, etc.

EXTERNAL 100 V AUDIO SIGNAL (OPTIONAL FEATURE)

If you decide for a connection to a 100 V audio system, you will need a transformer (KBL no.: 9100 0170 00) for the transmission of the audio signal.

This connection must be made by qualified, trained and authorized service technicians.

EXTERNAL PLAYERS & HEAD-/EARPHONES

A line connection has been integrated into the audio module so that the tanning device user can connect his or her own player such as an MP3 player, an iPod, etc. Take hold of the jack plug and pull the cable out of the opening.

Then connect the jack plug to the earphone jack of your player. Then select ”MP3 ext.” as the audio source from the interior control panel of the tanning device before you start playing your own tracks from the player.

The tracks can only be selected via the user’s own player. The volume can be controlled via the interior control panel of the tanning device and also via the corresponding operating elements provided by the user’s player.

Either a headphone or an earphone with a 6.3 mm jack plug can be used. The corresponding connector socket is located next to the line connector. The audio signal is switched over automatically.

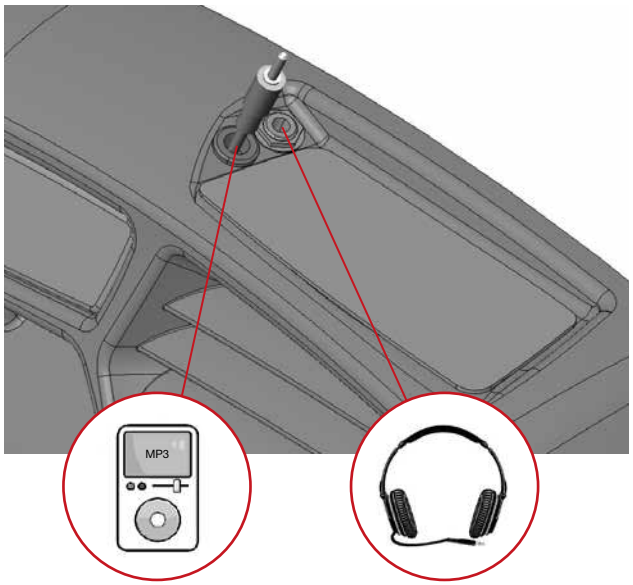

ATTENTION

- Danger of damage to the player due to overheating.
- Do not place your player within areas that are directly exposed to UV radiation.

4.7 Bluetooth connection

To connect an external player (smartphone etc.) wirelessly to the tanning device an optional Bluetooth interface is available.

CONNECT EXTERNAL PLAYER

A Bluetooth connection can be established in standby and during tanning mode.

Make sure that you are within the reception area (about 2 meters).

Make sure that your player is configured to search for other bluetooth devices. Should this not be the case, enable bluetooth manually. To do so, please read the instructions for your player.

- Depending on your settings the search will be performed automatically or manually. All available Bluetooth devices within reach will be listed after a short time.
- Among the available tanning devices choose “KBL Sound”. In the service menu, a trailing number (01, 02, 03, ...) can be added to tanning devices name.
- If necessary confirm the shown code and connect again. Not every smart phone asks for a code.

Example - Samsung Galaxy

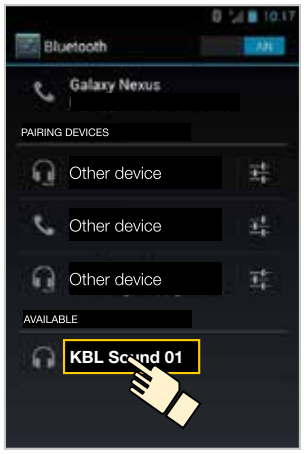

Example - Apple iPhone

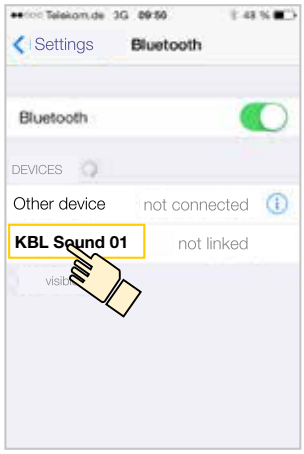

- A two-time beep indicates that your player is connected to the tanning device.

Example - Samsung Galaxy

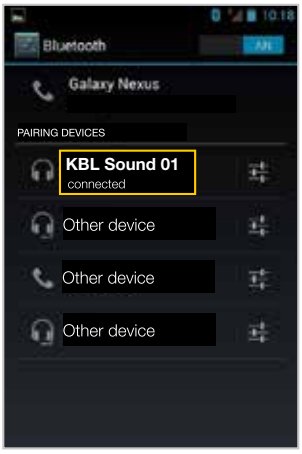

Example - Apple iPhone



- Set your player to a **medium volume level** and start the music.
- Adjust the volume level on your player.
- During the tanning session, the volume control has to be done at the tanning device.

DISCONNECT EXTERNAL PLAYER

An existing connection is disconnected automatically after tanning.

The connection is automatically disconnected if the tanning session is not started within 6 minutes.

COMPATIBILITY OF BLUETOOTH DEVICES

KBL GmbH attaches great importance to hardware compatibility. Due to the large number of manufacturers, KBL can not guarantee a 100 % compatibility. In rare cases, it may happen that a bluetooth connection can not be established.

CORRECTIVE ACTION

Each bluetooth device offers a list of paired devices. Delete the older entries in this list which have a profile that overlaps with the ones for which you want to pair your player.

Start the bluetooth device detection again.

4.8 Connecting the channel selection

The following diagrams show the wiring of the channel selection on the audio equipment's side, for pulse coding as well as for BCD coding.

Wiring on the audio system of the studio

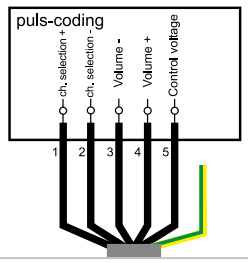

Wiring on the audio system of the studio

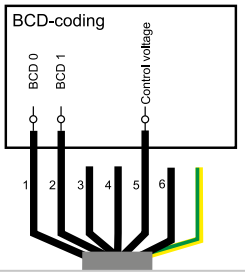

CHANNEL	BCD 0	BCD 1
1	0	0
2	1	0
3	0	1
4	1	1

4.9 Connecting the external timer

Pass both, the connector cable of the T-Max timer and the leads of the tanning device, from the main port through the cable entry in the rear wall to the T-Max Box.

T-MAX CABLE ENTRY AT THE MAIN PLUG
(EXTERNAL CONNECTOR CABLE)

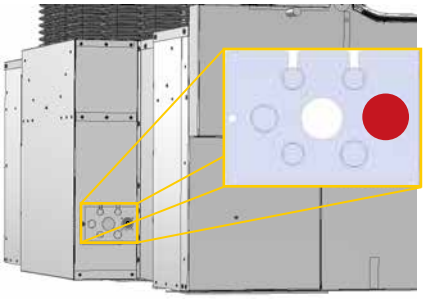

POSITION T-MAX BOX

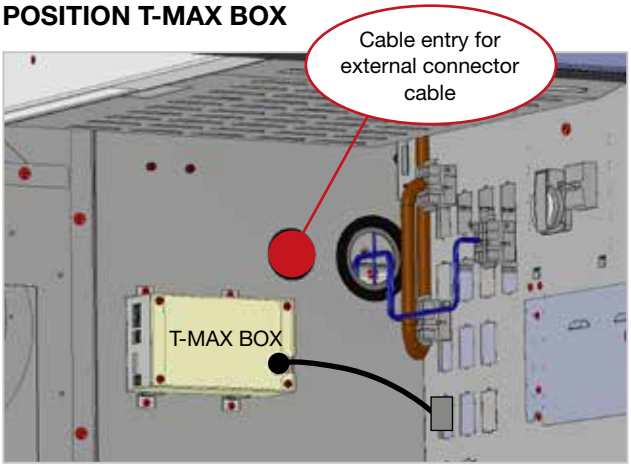

- Remove the cover from the T-Max Box.
- Insert the T-Max board to the socket pins of the box.

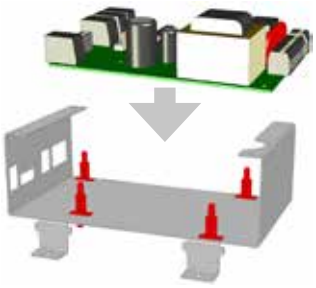

- Attach the connectors to the T-Max board and housing (ground).

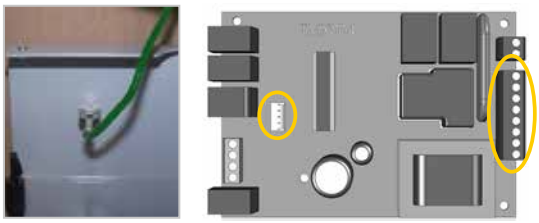

- Attach the cover of the T-Max Box.
- Fasten the timer above the T-Max box, using the two screws.

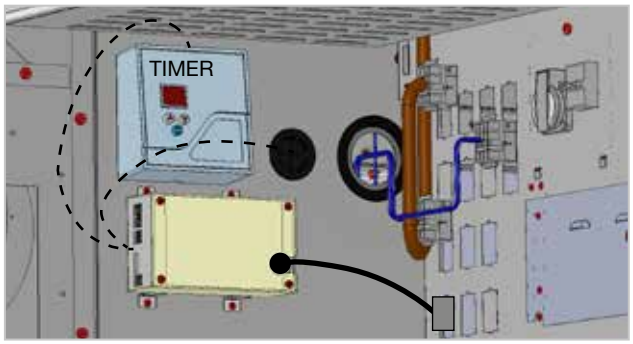

- Connect the external cable and the timer to the T-Max box.

- The exposure times stated in the exposure schedule must be entered at the external timer.
- Information on how to enter the exposure time can be found in the operating instructions of your external timer.

4.10 aquaCool and Aroma connections

AQUACOOL

The aquaCool box is equipped with a liquid-level sensor ① as well as with a connection to the aquaCool canister ②. Furthermore, the box houses the compressor ensuring the compressed-air supply ③, and the Aroma box ④ with its related connections.

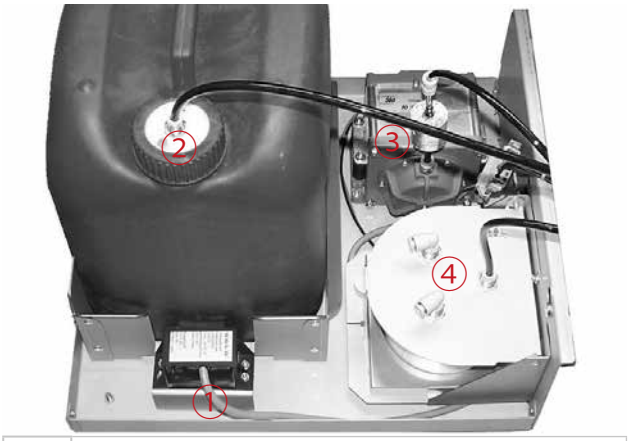

1	Connector (liquid-level monitoring)
2	Connection to aquaCool canister
3	Compressor with compressed-air connection
4	Aroma box

AROMA

The Aroma box is attached within the aquaCool box and equipped with three hose connections, one for the compressed-air supply ⑤ and two leading to the Aroma nozzles ⑥.

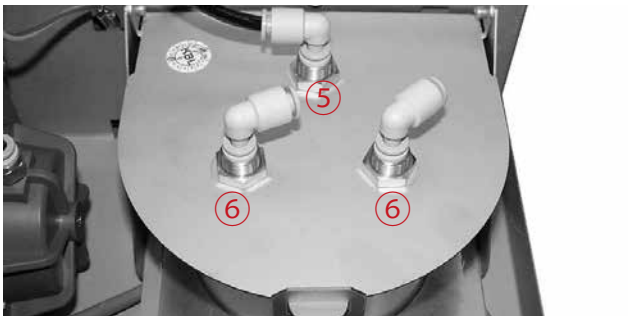

5	Aroma box (inlet)
6	Aroma box (outlets)

5. Start-up

Before switching on for the first time:

- Fix the supplied warning sign or one with the following wording permanently to the wall close to the tanning device:

Warning

UV-radiation can cause eye and skin damage as well as skin aging and possibly skin cancer. Ask the studio staff for further information.

Wear protective goggles.

Certain medicines or cosmetics can increase the sensitivity of the skin to UV radiation. If in doubt, consult a physician.

- Determine the pre settings for the tanning device in the service menu.
- Check correct installation of fluorescent tubes. The tube labeling must be visible, otherwise no tanning effect may be obtained.
- Store these Operating Instructions in a place that allows for easy access at any time.

5.1 Operating modes

STANDBY MODE

The tanning device is in an idle state, i.e. it is connected to the mains but is currently not being used. The tubes and the tanning lamps are switched off. From the standby mode, you can change over to the tanning mode or to the service mode.

TANNING MODE

The tubes and the tanning lamps are switched on and a tanning session is in progress. While the tanning device is in tanning mode, the settings for the ongoing tanning session can be changed via the interior control panel.

SERVICE MODE

In the service mode, the tanning device is configured for the tanning mode. Various values can be displayed and test functions can be carried out.

FAN RUN-ON

After the tanning session, the fan runs on for 3 minutes in order to cool down the device. The fan power is automatically decreased as the tubes cool down.

6. Tanning instructions

Tanning normally begins after one to two exposures and maximizes after one to four (1-4) weeks of exposure following the recommended schedule for your skin type.

6.1 Instructions for the user

Observe the following tanning instructions.

GENERAL

- Only individuals described in chapter *Intended use* and not listed in chapter *contraindications* may use the tanning device.
- The different skin types tolerate the sun and hence tanning times to a different degree. Please observe the specifications in the skin-type table (supplied with the tanning device) and the tanning times. After having reached the ultimate tan, further tanning can only be achieved by substantially exceeding the allowed tanning times. This must absolutely be avoided.
- It cannot generally be assumed that the use of a tanning device reduces the risk of getting a sunburn.

DANGER OF ULTRAVIOLET RADIATION

- The UV radiation of the sun or of UV appliances can cause damage to the skin or to the eyes. These biological effects depend on the type and amount of radiation as well as on the individual sensitivity of the skin.
- After excessive exposure to radiation, the skin may exhibit sunburn. Excessively repeated exposure to UV radiation of sunlight or UV appliances can result in premature ageing of the skin and in a higher risk of skin cancer.
- Do not expose yourself to UV radiation if you take medicine that increase the sensitivity to ultraviolet radiation, e.g. antibiotics, sulfonamides, psychiatric drugs, tranquillizers, antidiabetes treatments and diuretics and/or sun creams which contain psorale or coumarin may increase skin sensitivity. When in doubt, seek medical advice.
- Seek medical advice if persistent swellings or skin sores develop or pigmented moles change in appearance.
- As with natural sunlight, overexposure may cause eye injury and sunburn;
- A person with a history of skin problems should consult a physician before using the tanning device;
- Overexposure must be avoided;
- Children, elderly, or fair skinned people who always burn easily and either never tan or barely tan shall not use this tanning device.
- Remove cosmetics before tanning and do not use any sunscreen or products that accelerate tanning. For tanning, the skin should have been thoroughly cleaned and dry.

DANGER OF LONG-TERM CONSEQUENCES

Exposure to ultraviolet radiation may increase the likelihood of developing skin cancer and cause serious eye injury.

You do not need to become tan to make Vitamin D.

- Overexposure is to be avoided.
- The elderly people should not use this tanning device.
- Children shall not use this tanning device.
- While there is no immediate clinical evidence of UVA exposure and its effects upon pregnant woman, it is strongly advised that pregnant woman be discouraged from using the tanning device.

	If in doubt seek for medical advice!

FOR EACH TANNING SESSION

- Remove cosmetics before the session and do not use any sunscreen.
- Allow for at least 48 hours to pass between sessions.
- After a tanning session in a studio, do not take another sunbath out of doors on the same day.
- Always wear the supplied protective goggles.

	⚠ WARNING **Excessive dose of UV radiation** The unprotected eye can suffer from surface inflammation and in certain cases, e.g. after a cataract operation, excessive radiation can damage the retina. After many repeated sessions a cataract might form. • Inform users to use the supplied protective goggles that block UV rays.

Failure to use protective eyewear may result in severe burns or other eye injury. If discomfort develops discontinue use and consult a physician!

6.2 Exposure schedule

For the precise definition of the skin types, please refer to the supplied skin-type table.

If the tanning-session sequence is interrupted for 4 weeks or more, you will have to start with the first session again.

The times mentioned in the exposure schedules are only valid for tubes and facial tanners that are replaced according to the maintenance intervals.

This exposure schedule is valid for the following tanning device:

- KBL 5600 ALPHA - ELECTRONIC POWER - P2 *
  (KBL 5600 - 42p2/4a - 1616 ep u_us)
- KBL 5600 ALPHA - CPI ENERGY - P2 *
  (KBL 5600 - 42p2/4a - 1616 cpi u_us)

		Week 1 1st - 3rd Session	Week 2 4th - 6th Session	Week 3 7th - 9rd Session	Subsequent Weekly Session
SKIN TYPE	II	2	4	5	9
	III	2	5	6	10
	IV	2	5	6	12
	V	2	6	7	12
Maximum exposure is 12 minutes!					

- The exposure times stated in this exposure schedule must be entered at the external timer.
- Information on how to enter the exposure time can be found in the operating instructions of your external timer.

* For tube set, see table “Technical data”.

7. Tanning mode

WARNING

Excessive dose of UV radiation

Excessively prolonged tanning sessions may cause severe damage to skin and eyes.

- Never operate the tanning device with a defective timer.
- Observe the tanning times given in the exposure schedule.

The following explanations and functions refer to a tanning device that is fully equipped with all features.

7.2 Starting the tanning session

The tanning session automatically starts after the external timer controlled delay time has expired. During the preset delay time the tanning session can be started anytime manually using the START button at the tanning device.

7.3 Operation during the tanning session

You can control the functions of the tanning device via the interior control panel during the tanning session. It is particularly easy for you to access the basic functions.

Buttons with recesses that can easily be sensed allow for easy operation of the system even with your eyes closed.

NOTES:

20 seconds after your last input, the interior control panel changes over to the indication of the tanning time. An information line at the bottom edge of the interior control panel shows the current music track.

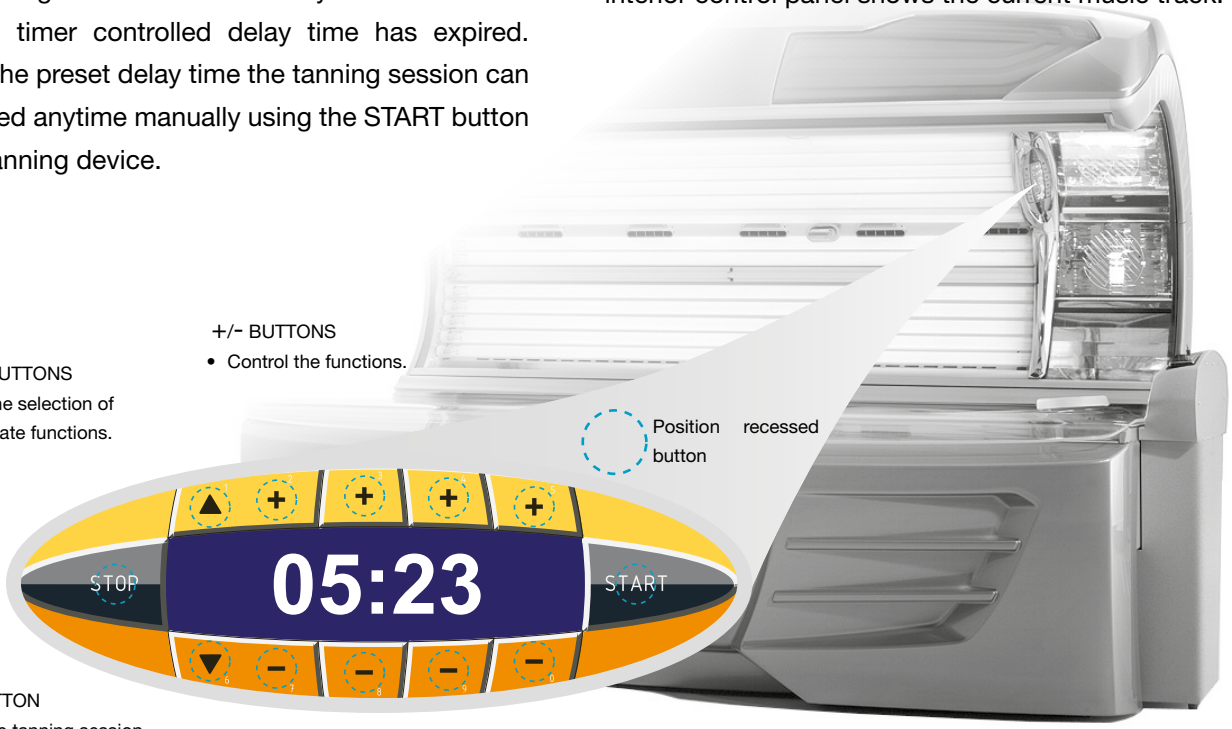

During the tanning session, you need quick access to basic functions such as volume control, body fan and facial tanners.
You should also be in a position to change the subordinate functions.
The interior control panel caters for both requirements. You have

- direct access to frequently needed functions via the “Basic functions” section, and
- access to the subordinate functions you made via the variable section of the control panel (display according to the rotation principle).

Basic functions section

Variable section of the interior control panel

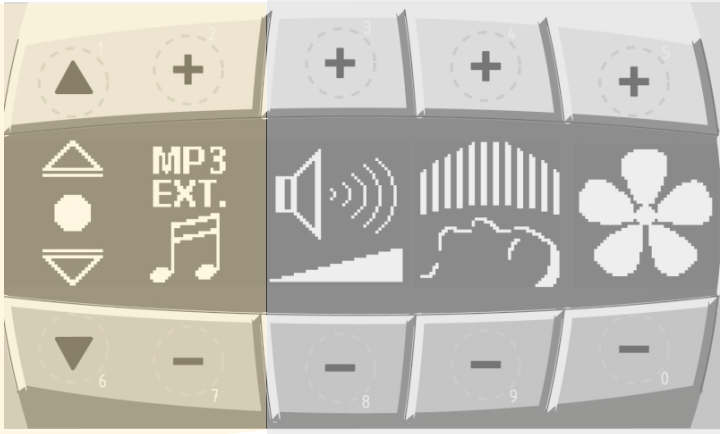

During the tanning session, you continue to have access to the subordinate functions. If you wish to make any changes, you can do so in the variable section of the interior control panel. By pressing one of the arrow buttons ▲ ▼, above or below the changeover symbol, all available functions will be displayed one after the other according to the rotation principle. You can switch these individual functions on or off and, if possible, make changes to the settings.

The basic functions portrayed here refer to a fully equipped tanning device.
If you have chosen a simpler equipment package, functions from the variable operating elements automatically take the place of the missing basic function.

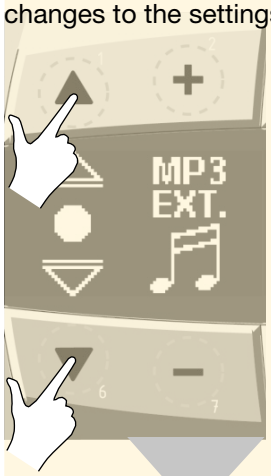

Prerequisite:
The functions must be available and activated in the service menu.

Selectable function symbols (for a fully equipped tanning device)



MP3-int. Studio MP3-ext. aquaCool Aroma megaVoice Air-con.

7.4 Basic functions

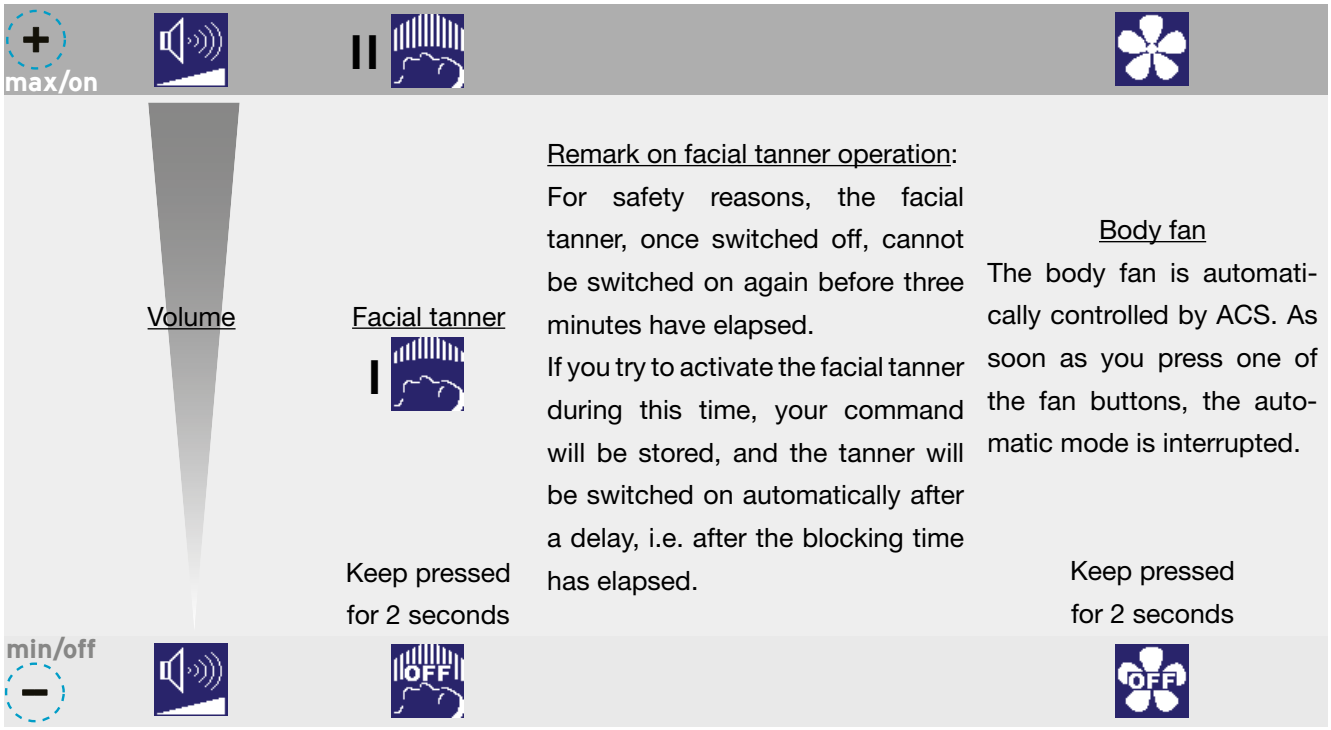

7.5 Variable section of the interior control panel

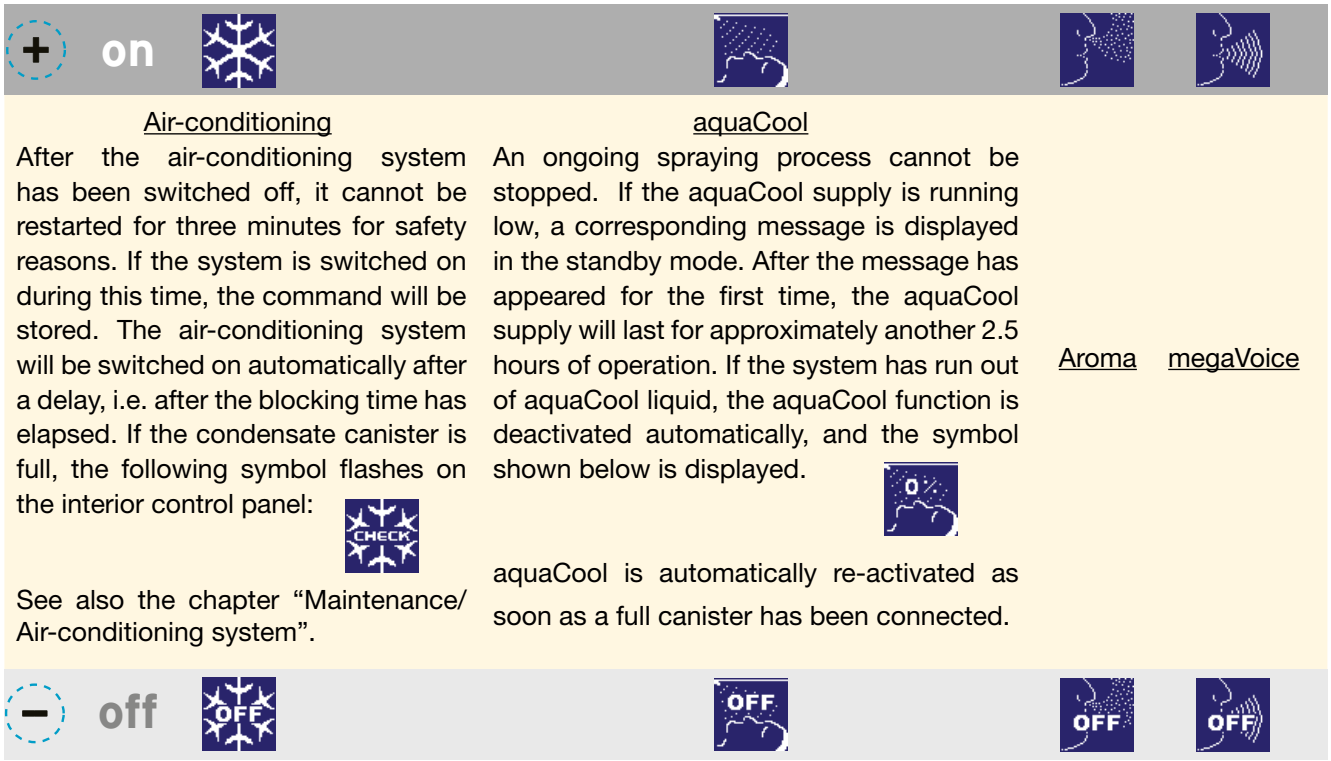

AUDIO FUNCTIONS

There is a maximum of three audio sources available at the user's disposal. If you change over to another source, you must activate it first. The activation is effected by pressing the + or the − button.
All inactive audio functions are marked with "OFF" on the interior control panel so that you can easily recognise the active audio source.

MODEL: ACTIVATING AUDIO FUNCTIONS

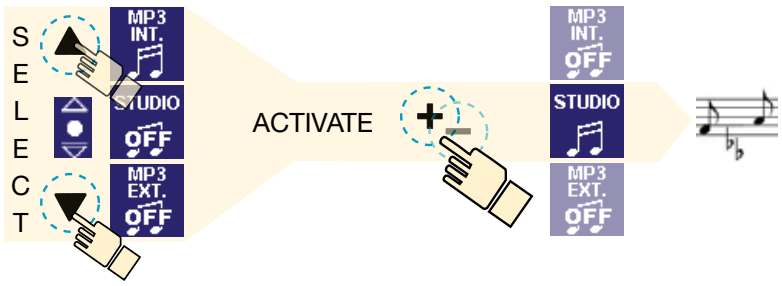

Variable section of the interior control panel (audio functions)

+ Channel +

Studio



This function is used to play the studio music.
If the Studio function has been activated, you can press the plus and minus buttons to browse through the channels, provided that more than one channel is available.

MP3 external (AUX)



The audio module of the tanning devise is equipped with a cable with a 3.5 mm jack plug so that you can make use of external players, such as MP3 players, iPods, etc. In this way, you can connect the headphone jack of your player to the tanning device. Use the corresponding operating elements of the external player in order to select the desired tracks. With the "MP3 external" control element you have also access to a Bluetooth connected device.

− Channel −

+ Tracks +

MP3 internal



This function is used to play the tracks of the internal MP3 player of the tanning device.
If the MP3 internal function has been activated, press the plus and minus buttons to browse through the individual tracks.

− Tracks −

8. Standby mode

Use standby mode to

- access service mode
- run standby functions
  - turn on/off audio (music)
  - turn on/off the decorative lighting of the tanning device
  - test aquaCool system (1 spraying cycle)

8.1 Service mode

ⓘ	For service mode information, refer to the **ASSEMBLY INSTRUCTIONS & MENU SETTINGS** guide.

8.3 Standby functions

LAYOUT OF THE INTERIOR CONTROL PANEL NUMBERS

The buttons of the interior control panel are allocated double functions. In addition to the standard operating elements, they stand for numbers that, in standby mode, provide access to standby and service functions. Simply enter the corresponding sequence of numbers on the interior control panel.

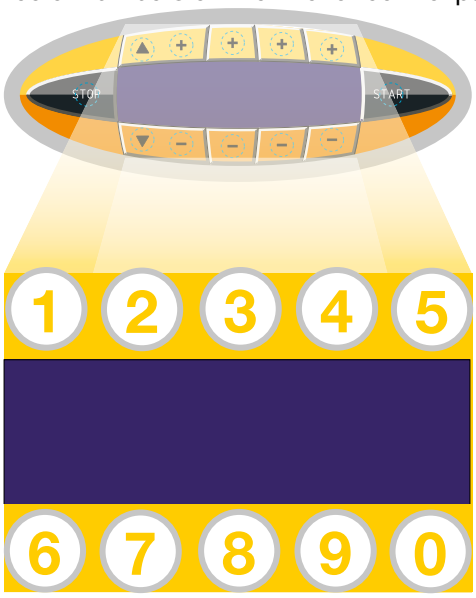

SWITCHING THE DECORATIVE LIGHTING ON AND OFF

5 0 5

NOTE

The connection times of the decorative lighting can be set in the service menu individually for each day of the week.

There are two independent connection periods (A and B) available for each day of the week.

MUSIC ON / OFF

3 8 3

AQUACOOL SPRAYING TEST

4 9 4

NOTE

Do not let too much time pass between the individual keystrokes when entering a sequence of numbers!

8.6 Set decorative lighting

For remote control of the color mode, you may use our colorMotion controller. Available only for tanning devices with LED technology.



To control the color mode of the tanning device use the stylish colorMotion controller with its elegant colorWheel and its full touch panel. Change brightness, turn on and off the lighting, select static colors or select one of the automatic color change programs. This wireless control technology allowes remote control from various directions with just a finger touch.

LOW POWER CONSUMPTION AND AWAKENING

After 20 sec. without touching the controller will automatically enter the low power sleep mode. Touch any key to wake up the controller to normal use.

MATCH CODE FUNCTION

In order to control several tanning devices with one RF-controller press down the match code button on the LED controller and the “I” button at the RF-controller at the same time, wait for the LED lamp flashing several times, then move away from the two buttons. To cancel match, press down the match code button on the LED controller and the “O” button at the RF-controller at the same time, wait for the LED lamp flashing several times, then move away from the two buttons. To do this, the service mode must be activated in the service menu at the tanning device.

The LED controller is located in the tray of the electronic box.

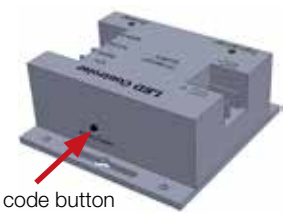

match code button

COLORMOTION CONTROLLER

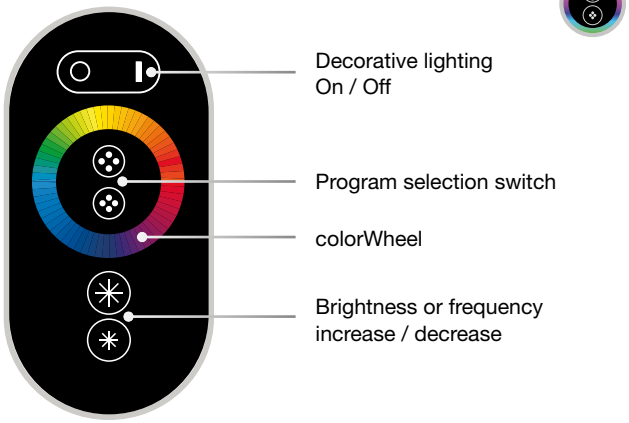

colorMotion controller - control elements

On / Off
Decorative lighting.
The selected setting automatically will be saved when the system is switched off.

Program selection switch

Program	Mode	Note
1	RED	Intensity adjustable
2	GREEN	
3	BLUE	
4	YELLOW	
5	PURPLE	
6	CYAN	
7	WHITE	
8	3 color - jump	Frequency adjustable (Repetition rate)
9	7 color - jump	
10	3 color - gradient	
11	3 color - smooth	
12	7 color - gradient	
13	7 color - smooth	
13	3 color - flicker	
15	7 color - flicker	
16	3 color - flash	
17	7 color - flash	
18	Auto play	

colorWheel
By touching the colorWheel the selected color switches on and additionally the program selection will be reset. At the next program selection, the program 1 (RED) will start.

Increases / decreases the intensity of the static colors (Program 1-7).
Increases / decreases the repetition rate (Program 8-18).

9. Maintenance and cleaning

Regular maintenance as shown in chapter *Maintenance intervals* is required for the safe operation of the tanning device and must be documented.

- The current operating hours of the tanning device and its parts requiring maintenance, may be displayed in the service menu. Please refer to chapter “Service menu” in the assembly instructions.
- Cleaning and disinfection operations are carried out in accordance with the cleaning and disinfection plan.
- Maintenance work may only be carried out by qualified, trained and authorized service technicians.
- Do not reach behind covers and do not open the tanning device with the device switched on.



- Use OEM spare parts of the same type only! The use of other parts will void the manufacturer’s warranty!
- In case of damage or injury proven to be the result of the use of non-genuine spare parts any liability is excluded.
- Replace UV-lamps only with the ones that are characterized on the tanning device. The use of other UV lamps will void the operating license!
- Only use original KBL ballasts for intelligent control systems and CPI-Energy tanning devices.



WARNING

Injuries and damage caused by improper or insufficient maintenance

Maintenance and care play a major role for the tanning devices performance and appearance over its useful life. Diligent compliance at the specified intervals is absolutely necessary to ensure the proper operation of your tanning device. Improper maintenance can cause the tanning device to be damaged or to become unusable. Always comply with the specified maintenance intervals. Refer to the following informations given in this chapter.

- Please note that the tanning device must be inspected regularly by an authorized KBL representative every 12 months from the date of the last inspection to maintain its proper condition.
- If the tanning device is in use for longer than 10 years, it must be completely overhauled by qualified, trained and authorized service technicians.
- If the tanning device has not been used for a longer period of time, then it must first be inspected by qualified, trained and authorized service technicians before being put back into operation.

MAINTENANCE DOCUMENTATION

- Establish an accurate record-keeping system for the maintenance reports.
- Ensure that all maintenance periods have been fully complied with and documented as described in chapter „Maintenance intervals“ in the operating instructions.

DISCONNECT MAINS VOLTAGE



DANGER

Live parts

Risk of death or fatal injury due to electric shock when touching live parts.

- Switch neutral
- Secure against reconnection
- Check for neutrality
- Ground and short-circuit
- Cover or shield any adjacent live parts or components

- Before carrying out any maintenance work, the tanning device must be disconnected from the mains voltage. That means that all live cables must be switched off. Switching off the tanning device alone is insufficient, as certain points may remain energized. Therefore, switch off fuses before performing any work and – if possible – remove them.

ADDITIONAL PROTECTIVE MEASURES

Accidental reactivation may result in serious accidents. After deenergizing, immediately secure all switches and fuses used for deenergizing against being switched on again.

- Unscrew circuit breakers.

Where circuit breakers cannot be unscrewed, a strip of adhesive tape can be applied over the actuation lever with the wording:

DANGER - DO NOT SWITCH

A sign with the text:

WORK IN PROGRESS

Place: .....

Sign may only be removed by: .....

must always and immediately be securely mounted.

- It is essential that you, the owner, and / or the studio operator check all components for signs of wear that can occur during normal use.
- After completing the work, refit all safety devices (e.g. switches).

9.1 Instructions on cleaning, disinfection and care

GENERAL INSTRUCTIONS

Before starting to clean the tanning device, take off any rings, bracelets, watches, etc. that you might be wearing, in order to avoid scratching the surfaces of the tanning device.

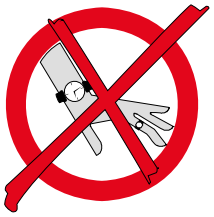

Cleaning fluid and/or disinfectant must not run into the tanning device.

CLEANING AND DISINFECTION

WARNING

Risk of Infection.
Risk of Infection by transferring through skin contact.

- **After each tanning session the tanning device must be cleaned and disinfected with a cleaning and disinfectant agent.**
- Use only EPA registered quaternary ammonium germicidal based detergent solution (follow product label for use-dilution), such as Lucasol One Step, to clean and disinfect the tanning device and its components.
- For thorough cleaning and disinfection, the product must be allowed to remain in contact with the surface being cleaned and disinfected for a specified amount of time. This specified amount of time depends on the cleaner/disinfectant which is used. Follow the directions for use of the cleaner/disinfectant. After this specified application time remove remaining cleaner/disinfectant from the surfaces of the tanning device. Use a single-pass paper towel.

APPLICATION

These symbols have the following meaning.

Apply the cleaning agent on the chamois or cloth and not directly on the surface.



ADDITIONAL CLEANING ACTIVITIES

WARNING

These cleaning works must be carried out by qualified, trained and authorized service technicians.

Every 6 months

Make sure that the inside and outside of the tanning device is cleaned and free from dust, fluff or objects.

Inadequate cleaning leads to overheating. As a result, this can lead to damage the tanning device!

Signs of electrical overstress

Check the cables and connections on signs of electrical overstress.

- **Discoloration**
- **Deformations**
- **Melting**
- **Blisters on the housing**

The affected components shall be replaced immediately! Use only OEM spare parts.

CLEANING AND DISINFECTION PLAN

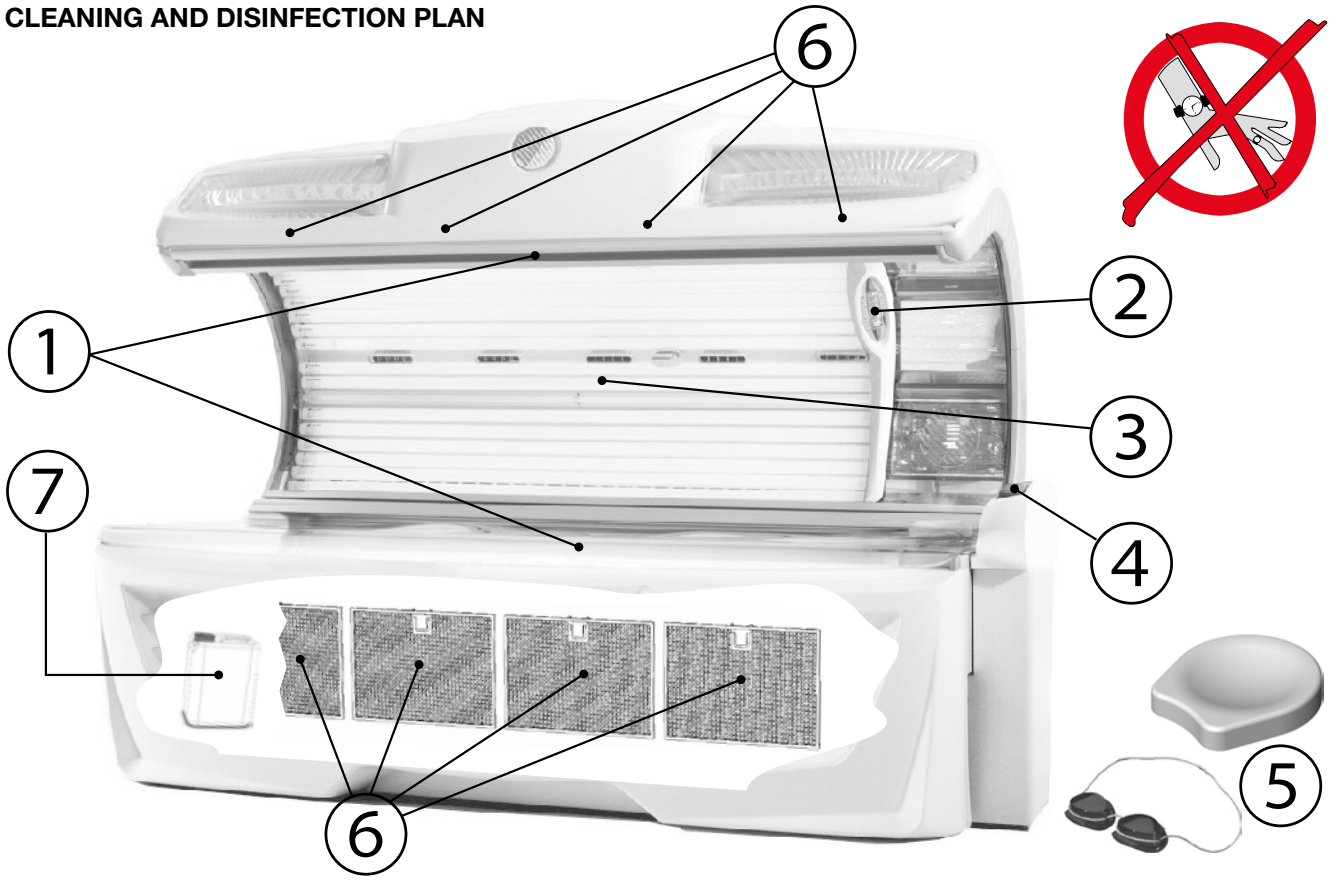

	Part	Application	Cleaning and disinfection activities	Interval
1	**Bench pane & handles**	Directly on the surface	Clean these parts with single-pass paper towels. Use only EPA registered quaternary ammonium germicidal based detergent solution (follow product label for use-dilution), such as Lucasol One Step, to clean and disinfect the tanning device and its components. For thorough cleaning and disinfection, the product must be allowed to remain in contact with the surface being cleaned and disinfected for a specified amount of time. This specified amount of time depends on the cleaner/ disinfectant which is used. Follow the directions for use of the cleaner/disinfectant. After this specified application time remove remaining cleaner/disinfectant from the surfaces of the tanning device.	After each tanning session
2	**Control panels**			
3	**Canopy pane and side pane**	Directly on the surface		
4	**MP3 cable**			
5	**Protective goggle and neck pillow**			
6	**Air Filter inserts**	-	Remove the inserts and rinse out under running water.	100 operating hours
7	**Condensate canister**	–	Empty the condensate canister if a corresponding message is displayed at the interior control panel.	When required
	Tubes		Remove tubes and clean them with a damp chamois.	200 operating hours
	UV filter panes, facial-tanner		Clean them with a damp chamois.	
	Chromed parts	Directly on the surface	Clean with a damp chamois and a cleaning agent for acrylic plastic (antistatic).	When required
	Plastic surfaces and varnished surfaces	Directly on the surface	Clean with a damp soapy cloth. Never clean with a dry cloth!	When required

9.2 Maintenance intervals

MAINTENANCE PLAN

Component	500 h / 6 months	1500 h / 1 Year	2000 h / 1 Year	10000 h / 4 Years	10000 h / 10 Years	Activity
Acrylic pane (bed)	X					Inspect and replace as necessary
		X				Replace
Acrylic panes (others)	X					Inspect and replace as necessary
			X			Replace
Springs of the canopy drive			X			Inspect and replace as necessary
				X		Replace
Chassis and associated fasteners			X			Inspect and replace as necessary
					X	Replace
Wiring and associated plugs / terminal connections			X			Inspect and replace as necessary
					X	Replace
Contactors		X				Inspect and replace as necessary
					X	Replace
UV-Filter Facial tanners			X			Inspect and replace as necessary
				X		Replace

Component	After approx. 200 operating hours	After approx. 800 operating hours	After approx. 1000 operating hours	After approx. 1100 operating hours	Activity
Tubes CPI & ICS				X	Replace
Tubes Electronic power		X			Replace
aquaCool nozzles	X				Inspect and replace as necessary
			X		Replace

Component	After approx. 500 operating hours	After approx. 3000 operating hours	Activity
Facial tanners	X		Replace
Air hoses	X		Inspect and replace as necessary
Air-conditioning unit	X		Clean the heat exchangers and check the condensate pump.

Additional or recurring inspections	
Every 6 months cleaning service	Make sure that the inside and outside of the tanning device is cleaned and free from dust, fluff or objects. See 9.1 -> Additional cleaning activities.
Every 12 months inspection	Please note that the tanning device must be inspected regularly by a KBL authorized representative every 12 months (from date of installation) to maintain its proper condition!.
10 Years inspection	If the tanning device is in use for longer than 10 years / 10000h, it must be completely overhauled by qualified, trained and authorized service technicians.
On start up	If the tanning device has not been used for a longer period of time, then it must first be inspected by qualified, trained and authorized service technicians before being put back into operation.
Protective pane-switch - Filter panes	Test the switches with each removing of filter panes

9.3 Tools and aids

4	Hexagon socket screwdriver (SW 4 / 60 mm)
PH2	Standard Phillips screwdriver (PH2)
	Finally acknowledge a process by pressing the Start button (interior control panel).
	Number of required persons

The following chapters describe the work steps required for carrying out maintenance and care actions.

At the beginning of each chapter, the required tools and aids are depicted, unless the corresponding process can be carried out by one individual person without any further auxiliary equipment.

	The assembly is basically carried out in reverse order of the disassembly. Exceptions are especially pointed out.

	If you open the bed part or one of the acrylic panes, you must, after closing, acknowledge a warning message appearing on the interior control panel.

9.4 Unlocking the bed

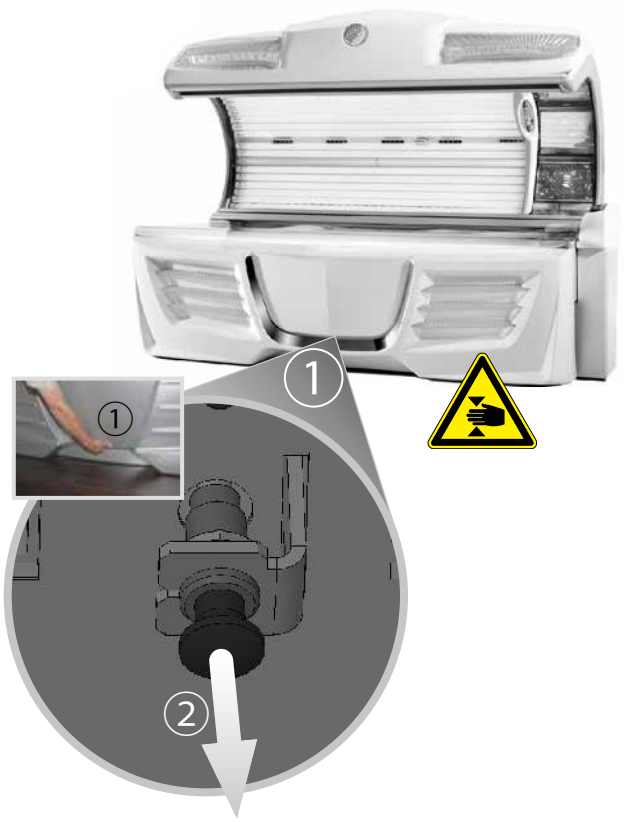

⇒	Fold up the canopy.
①	Reach into the lower gap positioned in the middle of the front panel.
②	Drag release button.
⇒	Tilt up the bed.

9.5 Acrylic panes

The acrylic panels used for the tanning devices are made of acrylic glass especially developed for this application, featuring a particularly high UV permeability and resistance, as well as an easy-care, hygienic surface that is gentle on the skin.

- The instructions for cleaning and care must be observed!
- The outer surface can be cleaned without any preparatory works.

ⓘ	The panes are cleaned from the inside whenever necessary. When cleaning the inside, it is recommended to clean also the tubes.

TILTING UP THE BED PANE

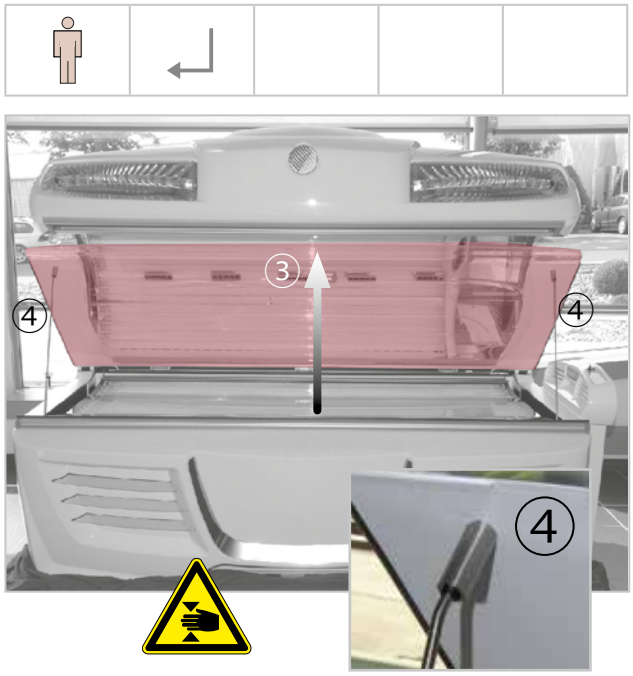

③	Hold the bed pane in the middle of the front edge and lift it.
④	Support the bed pane with the two lateral positioners.

TILTING UP THE INTERMEDIATE PANE

ⓘ	Only for tanning devices with air conditioning.



⑤	Lift the intermediate pane on one side in order to affix the suction cup in center of the bed pane.
⑥	The suction cup is attached to the linkage of the left hand side positioner.

TILTING DOWN THE CANOPY PANE

4

Attention

Prevent the pane from falling down when opening it.

- Open the middle pane lock at last.





⑤	Open the 5 locking spigots by using the hexagon socket screwdriver supplied. **Observe the order!**
⇒	Tilt the pane down.

REMOVING THE CANOPY PANE

4	PH2			

It is not usually necessary to remove the canopy pane for maintenance and cleaning operations. Should you prefer to work with the canopy pane removed, though, please proceed as follows:

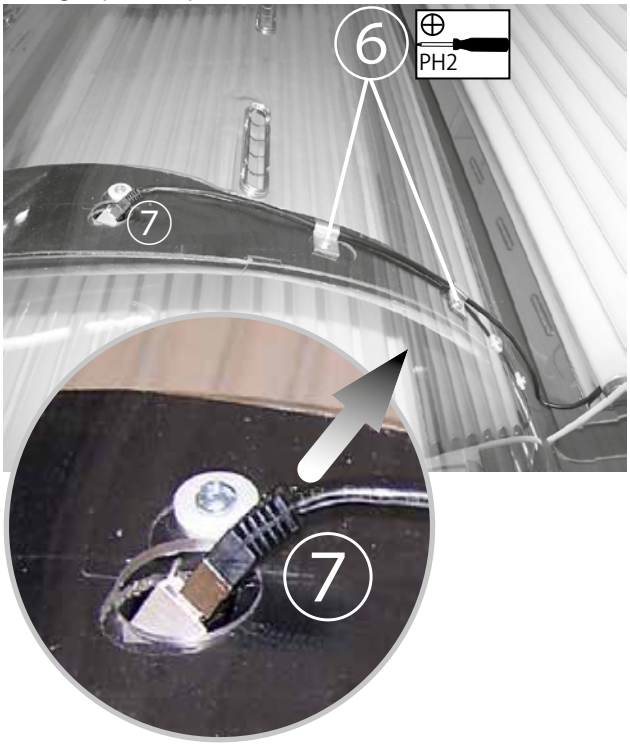

⇒	Tilt the canopy pane down.
⑥	Remove the strain relief of the interior control panel cable (Phillips screw M4).
⑦	Detach the interior control panel cable.

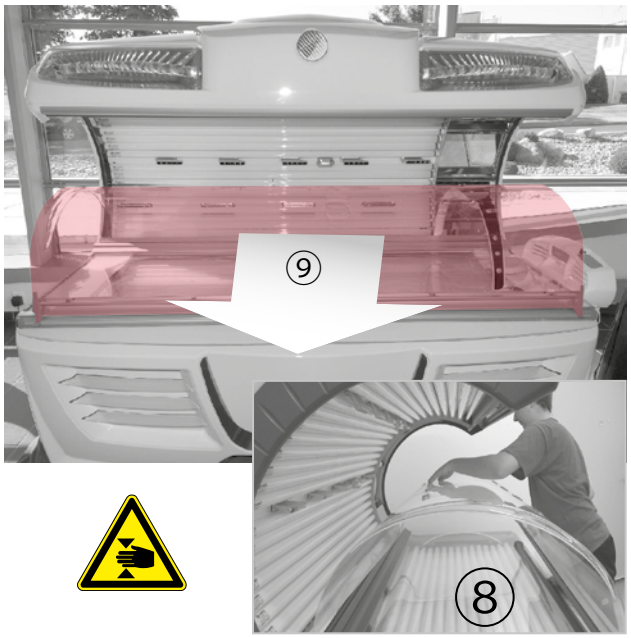

⑧	Reach into the rear ventilation gap positioned in the middle of the pane.
⑨	Carefully pull the pane towards the front and out of the tanning area.
⇒	Deposit the pane in a safe place.

ASSEMBLY NOTE

Proceed in reverse order in order to re-install the canopy pane. Make sure that the profil-guide is correctly positioned.

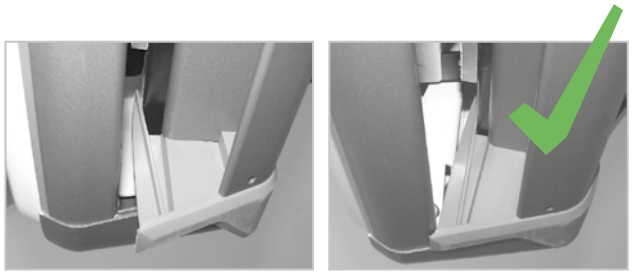

	When closing the canopy pane, make sure that the profil-guide is correctly positioned.

9.6 Filter panes

4				

DANGER

Excessive UV radiation

Operating the tanning device with defective filter panes can result in serious injury to skin and eyes.

- Never operate the tanning device if the filter pane is not present or defective.
- Carry out regular visual inspections.
- Replace filter panes only with ones of the same type.
- Have the filter panes installed only by trained technical personnel.

REMOVING THE FILTER PANES (PREPARATION)



⇒	Tilt the canopy pane down.
⑩	Undo the screws of the mirror panels (5 x M5).
⑪	Remove the central panels.
⑫	Tilt up the outer panels.

REMOVING THE FILTER PANES

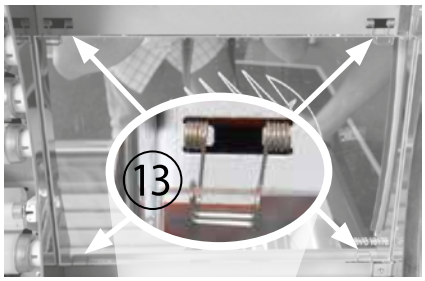



⑬	The pane is fixed with two clamps each on the two longitudinal edges.
⑭	Remove the pane from the spring retainer. To do so, press the pane to be exchanged slightly against a pair of clamps and, while keeping it slightly pressed, tilt it out of the holder on the relieved side.

SAFETY FUNCTION

The facial tanners are equipped with an additional safety function. There is a protective pane-switch behind each filter pane. This switch turns off the tanner if the filter pane is missing or broken.

TESTING THE PROTECTIVE PANE-SWITCHES

DANGER

Excessive UV radiation

Operating the tanning device with defective filter panes can result in serious injury to skin and eyes.

- Test the protective pane-switches with each removing of the filter panes.

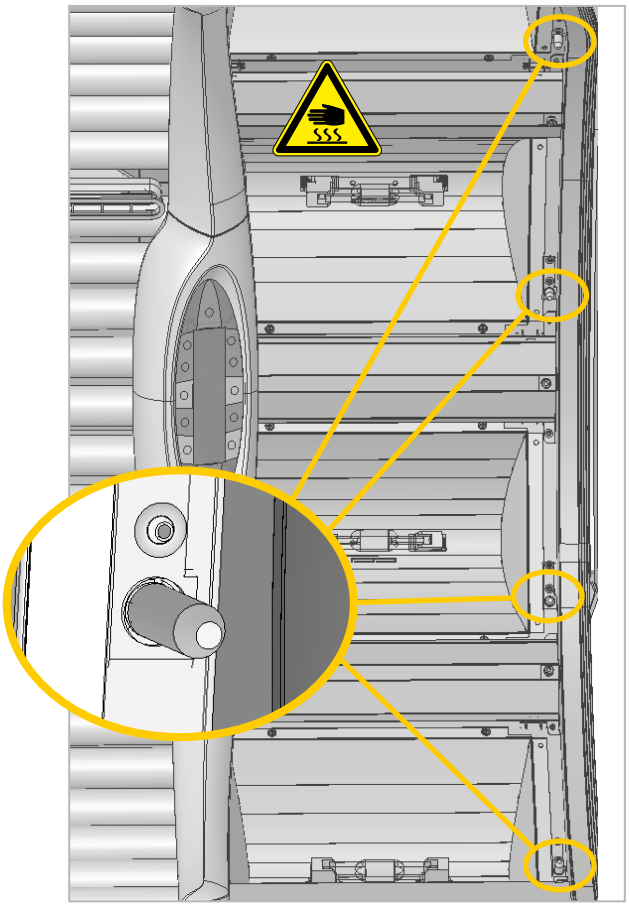

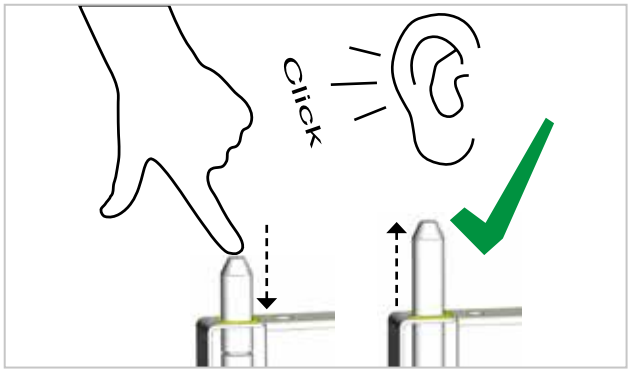

Press the switch. When a clicking sound is heard, and the switch automatically return, the system is functional.

9.7 Tubes

4				

By regularly cleaning the tubes you can help preserve their tanning power.

- When installing the tubes, make sure that the tube inscription is visible. If it is installed in a different position, there will be no tanning effect.
- After new tubes have been installed, the operating hours of the tubes must be reset in the service menu.

WARNING

Injuries and damage due to improper maintenance

The share of harmful UVB radiation may increase when the maintenance intervals for the UV lamps are exceeded or incompatible UV lamps are installed. As a result sunburn and other skin damage may occur.

- Always comply with the specified maintenance intervals, see chapter maintenance intervals / maintenance plan.
- Follow the cleaning / disinfection instructions.

REMOVING TUBE

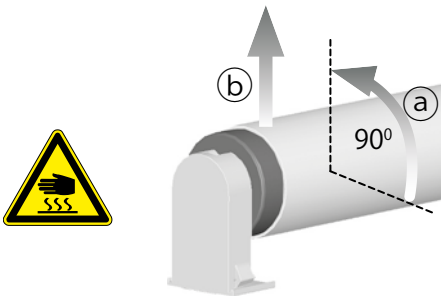

TUBE REPLACEMENT IN THE BED PART



⇒	Open the bed pane.
⑮	If the tanning device is equipped with an air-conditioning unit, remove the ducting pane.
⇒	Remove the tubes.

TUBE REPLACEMENT CANOPY PART

⇒	Tilt the canopy pane down.
⇒	Remove the tubes.

9.8 P2 Tubes

If your tanning device is equipped with P2 tubes, maintenance and care intervals are equal to the cycles for standard tubes.



Attention!

When installing / dismantling the P2 tubes, pay attention to the middle holding clamp.

9.9 Facial tanners

4				

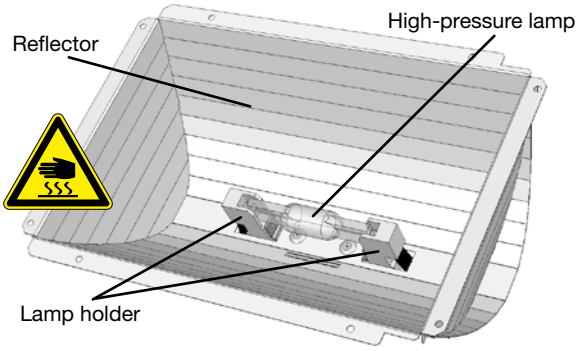

⇒	Tilt the canopy pane down.
⇒	Remove the filter panes.
⑯	Hold one end of the high-pressure lamp. **Use a clean cloth free from grease.**
⑰	Press the lamp against one side of the holder. As soon as the relieved side is loose, take the lamp out of the holder.

REPLACING THE HIGH-PRESSURE LAMP

Dirt accumulation and bad seating can lead to damage during the operation.

- Make sure that tanners and high-pressure lamps are correctly positioned in their respective holders. Make sure that the contact surfaces are clean when you insert the lamp.
- When installed, the little glass pin in the middle of the light bulb must point towards the reflector.
- Never touch the lamp or the reflector with your bare hands. If necessary, remove grease and dirt with an alcohol-containing agent.

Attention!
The high-pressure lamps must only be installed and removed by qualified, trained and authorized service technicians.

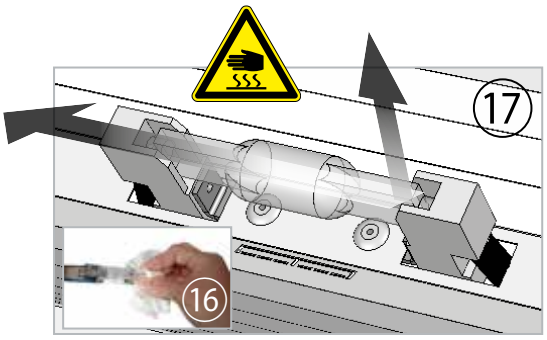

9.11 Interior unit lighting

The lighting from inside the tanning device is effected by high-performance LEDs. There are LED modules located inside the tanning device, in the canopy and in the side part. The outer decorative lighting also consists of LEDs.

In the case of a defect, replacement can only be made by qualified, trained and authorized service technicians. Contact your service partner in this case.

9.12 Filter cartridges

The cooling air for canopy and bed is filtered. Your tanning device is equipped with filter cartridges and continuous-service filter inserts. Therefore, purchase and replacement of conventional filter pads are not required. Clean the filter inserts after approx. 100 hours of operation, depending on the local circumstances. Vacuum the filter inserts or use a dishwasher.

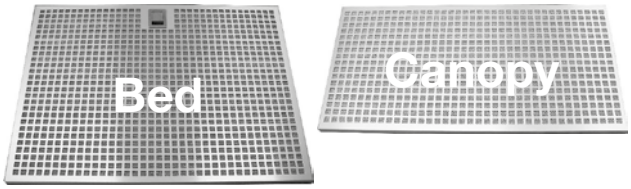

There are four filter cartridges each in the canopy and in the bed part.

NOTE: Take the opportunity and check and clean the heat exchangers of the air-conditioning unit (See also the chapter “Maintenance/Ventilation and air-conditioning”). Soiled heat exchangers substantially reduce the performance of the air-conditioner.

FILTER CARTRIDGES IN THE BED PART



⇒	Open the bed part.
⑱	Open the lock of the filter insert.
⇒	Remove the filter insert.

FILTER CARTRIDGES IN THE CANOPY PART

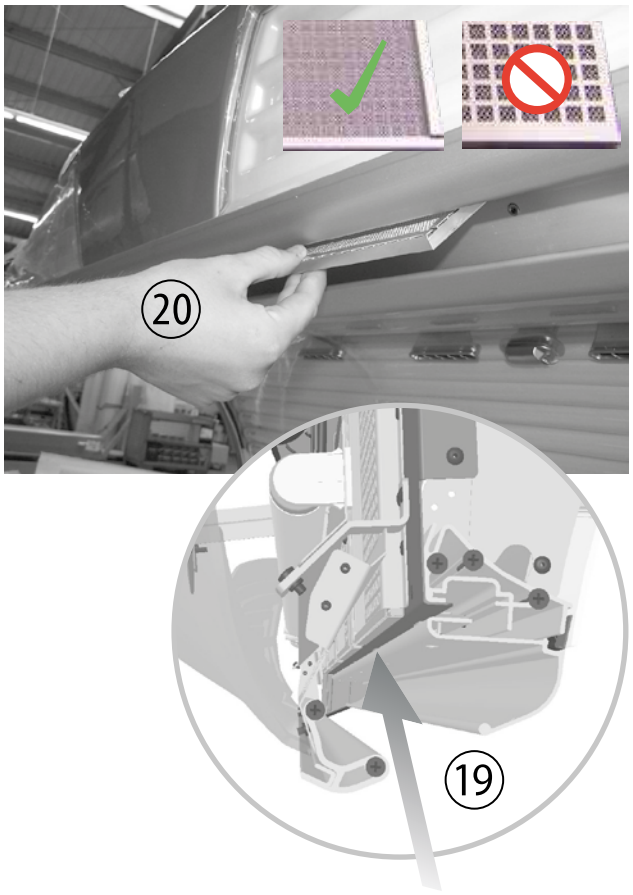

⑲	Reach into the gap between canopy pane profile and handle profile.
⑳	Remove the filter insert.

	When installing the insert, make sure that the honeycomb grill is directed towards the inside.

9.14 Ventilation and air-conditioning

In order to preserve the performance of the air-conditioning unit, clean the heat exchangers after 500 - 600 hours of operation.

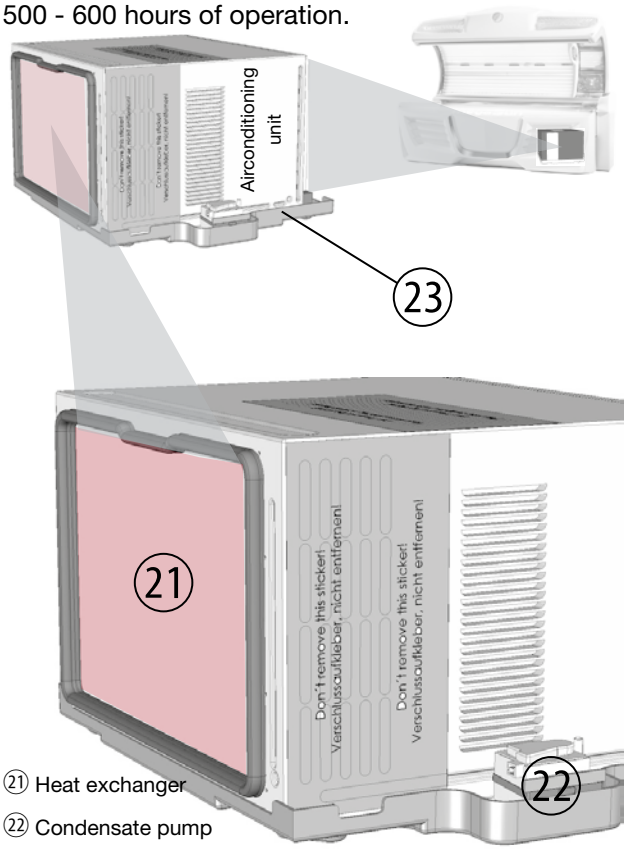

㉑ Heat exchanger
㉒ Condensate pump
㉓ Condensate tray

⇒	Open the bed part.
㉑	Clean the heat exchanger.
	Vacuum it carefully, paying attention not to damage the fins.

SERVICING THE VENTILATION SYSTEM

⇒	Check all hose connections.
⇒	Remove any kinks in the air hoses. Replace defective hoses immediately.

🚫	The exhaust air hose must not exceed a maximum length of 6 m if there is no auxiliary fan installed.

CHECKING THE CONDENSATE PUMP

The condensate pump ㉒ pumps away the condensation water at timer-controlled intervals. Check the function of this pump with each tube replacement.

⇒	Fill some water into the condensate tray ㉓. Use a hose and a funnel to do so.
🚫	Make sure that the water does not spill over.
⇒	Start a tanning session and then wait for 20 minutes.
⇒	The filling level of the tray must then be below the pump level.

EMPTYING THE CONDENSATE CANISTER

The condensate pump transports the condensation water into a canister via a hose. Once this condensate canister is full, a corresponding message is displayed. The air-conditioning symbol flashes (check), and the air-conditioning unit switches off shortly afterwards.

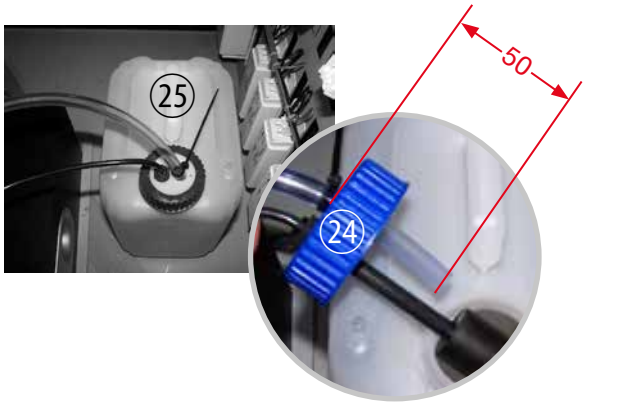

㉔	Unscrew the closing lid of the condensate canister.
㉕	Empty the condensate canister.
🚫	When closing, make sure that the condensate hose is inserted a max. of 50 mm into the canister.
⇒	Finally, acknowledge the aircon message on the interior control panel (START).

9.15 Recording to an SD card

REMOVING THE SD CARD

The SD card slot which contains the storage medium with the MP3 data from the internal MP3 player is located at the control box in the bed part of the tanning device.

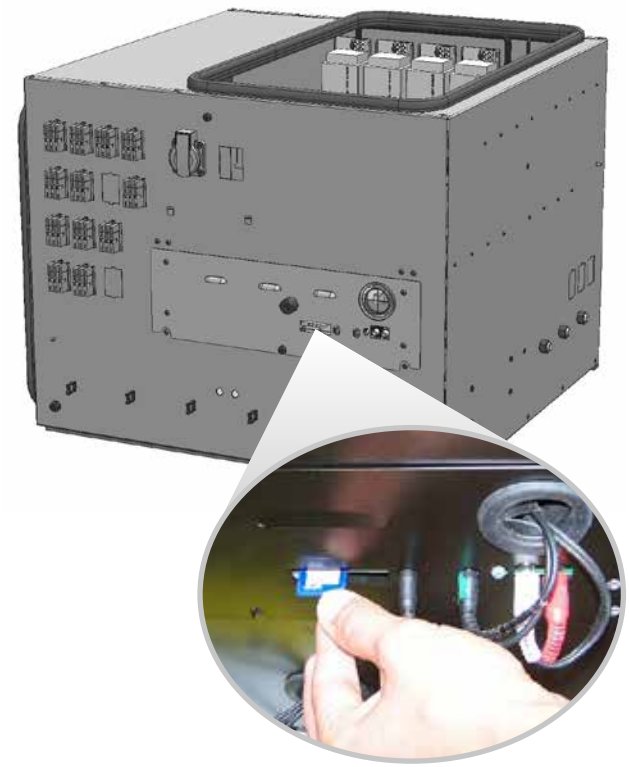

Please refer to the chapter “Technical data” for information regarding supported card sizes as well as file-system and MP3 formats. The SD card must not be formatted, the Voice folder and its contents must not be changed or deleted. Outside of this folder you can add or delete audio files as you desire. These audio tracks are played if the corresponding source has been selected. The number of files is limited by the storage capacity of the SD card.

RECORDING TO THE SD CARD

Attention
- Do not modify or delete the VOICE folder or the data it contains.

⇒	Insert the card into the computer and wait for it to be recognised.
⇒	Copy files to SD card, or delete files from it.

9.16 Aroma- and aquaCool

WARNING
- **Risk of infections**
- Function of nozzles impaired.

Do not use any agents other than aquaCool and Aroma gel supplied by KBL.

REPLACING THE AQUACOOL CANISTER

Due to the system a residual amount remains in the canister.

If the aquaCool canister is empty, corresponding messages are displayed, and aquaCool switches off shortly afterwards.



⇒	Open the bed part.
26	Unscrew the lid.
	Keep the hose end including the lid in a clean plastic bag while replacing the canister.
27	Replace the canister.
⇒	Start aquaCool initialization (service menu).

REPLACING THE AROMA TIN

When the Aroma tin is empty, a corresponding message is displayed.

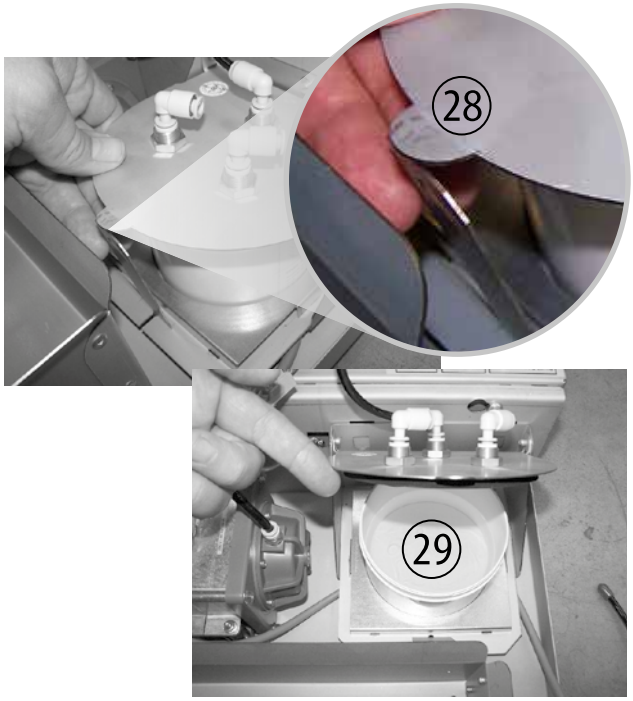

⇒	Open the bed part.
㉘	Unlock the retaining bracket.
㉙	Replace the tin.
⇒	Reset the Aroma counter in the service menu to 0 (Reset). Then the message on the interior control panel will disappear.

9.18 Replacing the aquaCool nozzles

After 1,000 hours of operation, the aquaCool nozzles must be replaced in order to ensure that the aquaCool system functions properly. The assembly instructions are included with your spare parts delivery.

10. System messages

ERROR MESSAGES			
After the error has been eliminated, all error messages must be acknowledged by pressing **START** on the interior control panel.			
No.	Status message	Description	Remedy
01	Excess temperature bimetal	Bimetal switch triggers.	Check the air-intake/air-exhaust system. Let the tanning device cool down.
02	Maximum tanning time!	Enabling signal from coin-box system comes in longer than the time value approved under “Maximum tanning time” (voltage remains connected)	Disconnect from the coin-box system.
03	Excess temperature exhaust fan, please check	Bimetal switch in the fan triggers.	Make sure the fan runs freely. Check the air-intake/air-exhaust system. Let the tanning device cool down.
04	Connection fan speed control faulty	Faulty communication between Mainboard and fan-speed control.	Check / replace the patch cable.
08	Canopy pane open, please close	Contact of the canopy pane has triggered.	Close the canopy pane and check the contact.
09	Side pane open, please close	Contact of the side pane has triggered.	Close the side pane and check the contact. If the fault persists, contact your Customer Service.
10	Bed / bed pane open, please close	Contact of the bed pane has triggered.	Close the bed / bed pane and check the contact.
11	Excess temperature bimetal x-tra Tan	Bimetal switch in the shoulder tanner triggers.	Check the ventilation system of the shoulder tanner. Let the tanning device cool down. If the fault cannot be eliminated in this way, contact your Customer Service.
12	KBL7 Hardware error Input-Controller	Mainboard defective.	Contact your Customer Service.
13	Maximum write cycle flash memory reached	Maximum write cycle flash memory reached.	Contact your Customer Service.
14	Error! SD card read error (CRC fault)	Update via SD card failed (CRC fault).	SD card check / replace.
15	Error! no access to the SD card	Update via SD card failed (access error).	SD card check / replace
17	Parameter storage not found, please connect and restart	Parameter storage not found, please connect and restart.	Check connector parameter storage. If necessary replace parameter storage.
18	Parameter storage no valid serial number	Parameter storage no valid serial number.	Contact your Customer Service.
19	CAN-BUS: Interior display V1 is incompatible	CAN-BUS operators incompatible.	Use CAN-BUS operaters V2.
20	CAN-BUS: preSelection display V1 is incompatible		
21	CAN-BUS: audio module full V1 is incompatible		
22	CAN-BUS: RGB module V1 ist incompatible		
23	Parameter storage write error	Parameter storage write error.	Check connector parameter storage. If necessary replace parameter storage.
24	Parameter storage read error	Parameter storage read error.	Check connector parameter storage. If necessary replace parameter storage.
25	Frequency detection: detection failed!	Frequency detection failed.	Restart the controller. Contact your Customer Service after the third unsuccessful restart.

ERROR MESSAGES			
After the error has been eliminated, all error messages must be acknowledged by pressing **START** on the interior control panel.			
No.	Status message	Description	Remedy
26	Frequency detection: power supply connection faulty (connector X6/E6)!	Frequency detection failed. No mains voltage.	Check mainboard connector X6/E6.
28	Excess Temperature	Temp. 1-wire sensor >= 70°C for 3min	Contact your Customer Service.
29	Excess Temperature	Temp. 1-wire sensor 80°C for 10sec	Contact your Customer Service.

INFORMATION MESSAGES			
No.	Info. message	Description	Remedy
203	Fill level aquaCool canister low	The content of the aquaCool canister is sufficient for another 2.5 hours of operation with a spraying time of 6 seconds each.	Replace the empty aquaCool canister with a full one. Do not replace aquaCool with any other liquid.
204	Connection aquaCool unit faulty	Communication between control and module/interior control panel has been interrupted.	Check / replace the patch cable. Acknowledge the message by pressing START. If the fault persists, contact your Customer Service.
205	Connection audio module faulty		
206	Connection inside display faulty		
207	aquaCool canister empty	aquaCool canister empty.	Replace the aquaCool canister with a full one. See chapter: Refilling Aroma and aquacool
208	Aroma supply low, please renew	System has run out of scent.	Replace the Aroma tin. See chapter: Refilling Aroma and aquacool
209	aircon: condensed-water canister full, please empty	Condensate canister of air-conditioning unit full.	Empty the condensate canister of the air-conditioning unit, acknowledge the message by pressing START.
210	Low battery charge, please renew	Button cell (CR-2032) of the control board discharged.	Replace the button cell (CR-2032).
211	Connection preselect display faulty	Communication between control and “preSelection” control panel has been interrupted.	Check / replace the patch cable. Acknowledge the message by pressing START. If the fault persists, contact your Customer Service.
212	Connection RGB-module faulty		
213	SD card missing	No SD card in the audio module.	Insert an original SD card. See chapter: Recording to an SD card/Removing the SD card
214	SD card unreadable	SD card defective, incompatible content.	Insert a new original SD card. Acknowledge the message by pressing START. See chapter: Recording to an SD card/Removing the SD card. If the fault persists, contact your Customer Service.
216	Voltage varies, blease check	Power supply to the mainboard varies	Check power supply to the mainboard.
217	No voice files on the SD card, pleas check.	No voice files on the SD card found.	Rebuild voice folder on the SD card. If necessary replace original SD card.
218	Connection DALI-unit faulty.	DALI-unit - CAN-BUS connection lost.	Contact your customer service.
219	Connection rubinColl unit faulty.	Driver beautyBooster. CAN-BUS connection lost.	Contact your customer service.
230	Connection bluetooth module faulty	Communication between control and bluetooth module has been interrupted.	Check / replace the patch cable. Acknowledge the message by pressing START. If the fault persists, contact your Customer Service.
231	No display	Internal notification - stored in the error log (service technician information).	-

11. Technical data

Ambient conditions		
Installation site	• In dry rooms (booths) with sufficient airing and ventilation • Maximum relative air humidity: ≤ 70 % • Maximum room temperature: ≤ 86°F (30°C)	• Minimum height of the room: ~85,04 inches • Only on a non-combustible basement • Maximum operating altitude: ≤ 6500 ft
Weights and measures		
Dimensions in inches (Height x width x depth)	~58,27 x ~91,74 x ~63,39 (when closed) ~70,87 x ~91,74 x ~56,70 (when open)	
Bed pane max. load capacity	330 lbs	
Weight	~1256 lbs	
Electrical connection values		
Protective class	IP20	
Mains voltage	3-phase: 3 x 220 V / ~ / 60 Hz	
Wire cross section	3-phase: 4 x AWG8 THHN cable in a isolation tubing (e.g. flexible metallic conduit, utilizing appropriate connectors)	
Fuses	See unit data - For Canada all devices with Class-A ground fault circuit interrupter GFCI	
MP3-Player	• Supports SD cards up to 1-2 GB (SD) / 4-16 GB (SDHC) • Supported file system (SD card): FAT16, FAT32 • Supported MP3 files: constant and variable bit rate, 96-320 Kbit/s	
Central exhaust air		
Fan / blower	Exhaust-air socket Ø ~11,81“ - Height to top ~70,87" (with and without hot air recirculation) - Minimum exhaust air flow rate: 2250 m³/h (594400 gal/hour)	
Exhaust air duct hose	Ø 300mm (~11,81“)	

UNIT DATA - KBL 5600 alpha				
Electronic Power - P2 (KBL 5600 - 42p2/4a - 1616 ep u_us)			**Item no**	
Tubes	Canopy: Bed:	24x megaLine 1825 R 160W 2x megaLine 1857 R 80W 16x megaLine 1900 R 180W	3230075125 3230074881 3230075155	
Facial tanner	4x megaLine HP 500		4230304000	
Filter panes	4x EVO 19176		3020019176	
Nominal power	With air conditioning: 10700W / Without air conditioning: 9300W			
Fuses	3-phase: 3 x 40 A			
CPI Energy - P2 (KBL 5600 - 42p2/4a - 1616 cpi u_us)			**Item no**	
Tubes	Canopy: Bed:	24x megaLine 1825 R 160W 2x megaLine 1857 R 80W 16x megaLine 1900 R 180W	3230075125 3230074881 3230075155	
Facial tanner	4x megaLine HP 500		4230304000	
Filter panes	4x EVO 19176		3020019176	
Nominal power	With air conditioning: 11900W / Without air conditioning: 10500W			
Fuses	3-phase: 3 x 50 A			

11.1 Dimensions and distances

DIMENSIONS

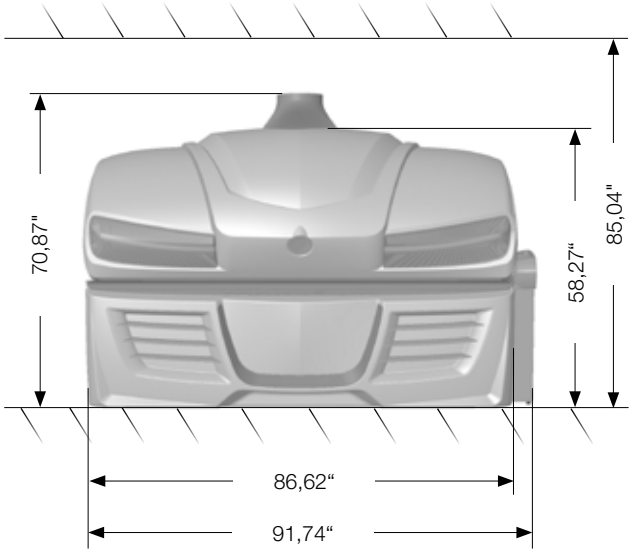

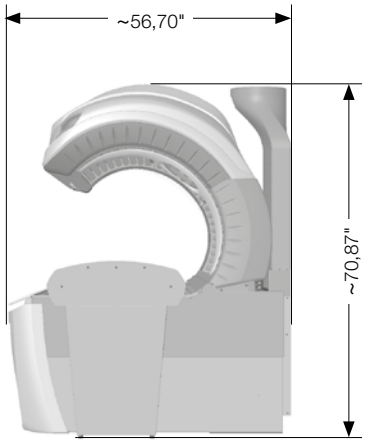

DISTANCES

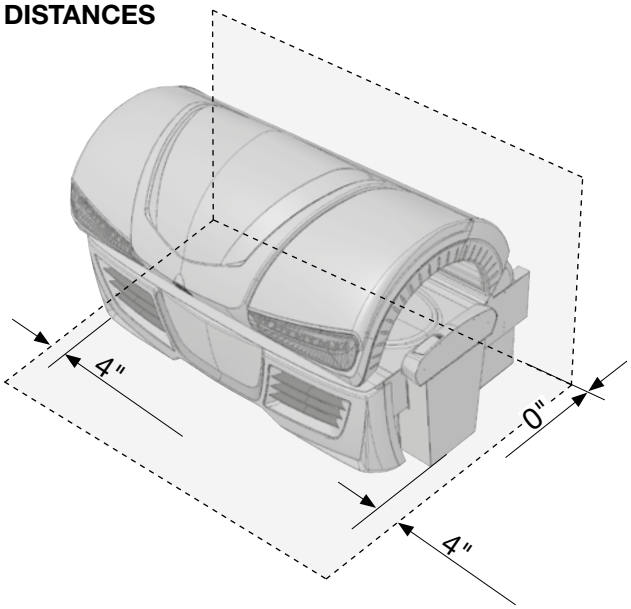

11.2 Labels attached to the tanning device (examples)

Label with half original size

KBL
The Beauty & Health Company

Distributed by
Laundries unlimited of Indiana, Inc.
dba Tanning Supplies unlimited
1504 Sadlier Circle South Drive
Indianapolis, IN 46239, U.S.A.

Serial number: KBL00712345
Manufactured: 12/2018
Type : KBL 5600 alpha
KBL 5600 - 42p2/4a - 1616 cpi u_us
Mains Voltage: 3 x 220V / ~ / 60Hz
Rated capacity: 10500W / *11900W
* with air-con. unit

Conforms to ANSI/UL Std. 482 and Cert. to CAN/CSA Std. C22.2 No. 224-M89
Intertek 3090568

(01)04260489020029(11)181214(21)KBL00712345

Fluorescent-Tubes Top:	24 x megaLine 1825 R 160W	(3230075125)
Fluorescent-Tubes Top:	2 x megaLine 1857 R 80W	(3230074881)
Fluorescent-Tubes Bed:	16 x megaLine 1900 R 180W	(3230075155)
H.P.-Tubes facial:	4 x megaLine HP500	(4230304000)
Filter Pane:	4 x evo 19176	(3020019176)

CAUTION!
CONNECT ONLY TO A CIRCUIT PROTECTED BY A CLASS A GROUND FAULT CIRCUIT INTERRUPTER. (CANADA ONLY)
ATTENTION!
BRANCHER SEULEMENT À UNE DÉRIVATION PROTÉGÉE PAR UN DISJONCTEUR DIFFERENTIEL DE CLASSE A. (QUE POUR LE CANADA)

WARNING!
GROUNDING CIRCUIT CONTINUITY IS VITAL FOR SAFE OPERATION OF EQUIPMENT. NEVER OPERATE EQUIPMENT WITH GROUNDING CONDUCTOR DISCONNECTED.
AVERTISSEMENT!
POUR UN FONCTIONNEMENT SÛR, NE JAMAIS UTILISER CET APPAREIL QUAND LE CONDUCTEUR DE MISE À LA MASSE EST DÉCONNECTÉ.

Use in dry locations only **IP20**

No.: 0100005003

All ratings of the decorative LED lightning are included in the total rating of the tanning device.
Part No.: 3010370868

WARNING:
HIGH LEAKAGE CURRENT -
ENSURE PROPER GROUNDING.

AVERTISSEMENT
COURANT DE FUITE ÉLEVÉ -
FOUTNIR UNE MISE À LA TERRE EFFICACE.
Part No. 3010370840

ATTENTION: Do not use the sunbed if the filter glasses are missing or damaged!
ATTENTION: Quand le filtres de protection manque ou sont abîmé, n'utilisez pas l'appareil!
Part No. 3010370803



CAUTION!
DISCONNECT SUPPLY CORD BEFORE OPENING UNIT
ATTENTION!
DÉBRANCHER LE CORDON D'ALIMENTATION AVANT D'OUVRIR
Part No. 3010370802

This device is intended for the tanning of the human skin of an adult person who is in full command of his/her physical, sensorial and mental faculties. Lie down on the bench in a straight position and with physical contact to the bench.

CAUTION: EXPOSURE POSITIONS OTHER THAN SPECIFIED MAY RESULT IN OVEREXPOSURE AND ARE NOT RECOMMENDED.
Tanning normally begins after one to two exposures and maximizes after one to four (1-4) weeks of exposure following the recommended schedule for your skin type.
Wear protective eyewear.
Eyewear: Schmerler GmbH, No. 2255

DO NOT REMOVE THIS LABEL
Read the instruction booklet before using this device.

RECOMMENDED EXPOSURE SCHEDULE
Tanning can begin at a regular basis by gradually increasing the exposure times until maximum tanning has occurred (in approx. 4 weeks).
MAXIMUM EXPOSURE TIME: 12 minutes.

Skin type	Week 1 1st - 3rd Session	Week 2 4th - 6th Session	Week 3 7th - 9th Session	Subsequent Weekly Session
II	2 min	4 min	5 min	9 min
III	2 min	5 min	6 min	10 min
IV	2 min	5 min	6 min	12 min
V	2 min	6 min	7 min	12 min

Do not tan more than once in a 48 hour period.

This device is in conformity with performance standards for sunlamp products under No. 21 CFR 1040.20.
This device is intended to be used with the following lamps:
Canopy: megaLine 1825 R 160W
megaLine 1857 R 80W
Bench: megaLine 1900 R 180W
Facial units: megaLine HP 500

For replacement lamps, eyewear or parts please contact:
Tanning Supplies unlimited.
1504 Sadlier Circle South Drive;
Indianapolis; IN 46239, U.S.A.
Part No. 3010371566 A

WARNING - ULTRAVIOLET RADIATION - FOLLOW INSTRUCTIONS - FAILURE TO USE PROTECTIVE EYEWEAR MAY RESULT IN SEVERE BURNS OR OTHER EYE INJURY - IF DISCOMFORT DEVELOPS, DISCONTINUE USE AND CONSULT A PYSICIAN.

ATTENTION - RAYONNEMENTS ULTRAVIOLETS - VEUILLEZ SUIVRE LES INTRUCTIONS - SANS DISPOSITIF DE PROTECTION DES YEUX, CE PRODUIT PEUT CAUSER DES BRÛLURES OU LÉSIONS OCULAIRES GRAVES - SI VOUS SENTEZ UN MALAISE, EN DISCONTINUER L'USAGE ET CONSULTER UN MÉDECIN.

DANGER - Avoid overexposure. As with natural sunlight, overexposure can cause eye and skin injury and allergic reaction. Repeated exposure may cause premature aging of the skin and cancer.
Medications or cosmetics may increase your sensitivity to the ultraviolet radiation. Consult physician before using sunbed if you are using medications or have a history of skin problems or believe yourself especially sensitive to sun light. If you do not tan in the sun you are unlikely to tan from use of this product. Children, the elderly, or fair skinned people who always burn easily and either never tan or tan minimally should not use this equipment.

DANGER - Eviter surexposition. Comme avec la lumière naturelle du soleil, la surexposition peut causer lésions aux yeux et à la peau et réactions allergiques. Une exposition prépétée peut causer un vieillissement prématuré de la peau et cancer. Médicaments et cosmétique peuvent augmenter votre sensibilité aux rayons ultraviolets. Consulter un médecin avant d'utiliser la lampe à ultraviolets si vous utilisez médicaments, si vous avez problèmes de peau ou si vous croyez vous êtes particulièrement sensibles au rayons du soleil. Si vous ne bronzez pas avec le soleil c'est improbable que vou povez vous bronzer en utilisant ce produit. Enfants, personnes agées, ou personnes à peaux très claire, qui deplus sont très sensibles à un coup de soleil et ne brunisent pas ou très peux ne doivent pas utiliser cet appareil de bronzage.
Part No. 3010370800

Part No. 3200551117

ATTENTION: THIS SUNLAMP PRODUCT SHOULD NOT BE USED ON PERSONS UNDER THE AGE OF 18 YEARS
Part No. 3010371614

12. IMPLIED WARRANTY

TSU tanning supplies unlimited

1. **WARRANTY** - Laundries unlimited of Indiana, Inc., dba Tanning Supplies unlimited (the "Company") warrants that electrical components are free from defects in its materials and workmanship, under normal use, for one year ("Warranty Period") beginning from the purchase invoice date of the KBL indoor tanning device ("Product") is purchased from the Company or an authorized Distributor of the Company or from an authorized Dealer or Representative of such Distributor or Dealer (collectively the "Distributor"), if you, the original purchaser ("Purchaser"), retain ownership during the Warranty Period. This Warranty is nontransferable. THE WARRANTY CONTAINED IN THIS SECTION 1 IS SUBJECT TO VOIDANCE IN ACCORDANCE WITH SECTION 3.

2. **WARRANTY FOR ITEMS NOT COVERED BY THE ONE YEAR WARRANTY SET FORTH IN SECTION 1; Acrylics, lamps, lamp starters, filter glass plates, metal structure, plastic covers and air filters** are not covered under this warranty. THE WARRANTY CONTAINED IN THIS SECTION 2 IS SUBJECT TO VOIDANCE IN ACCORDANCE WITH SECTION 3.

3. **VOIDANCE OF THE WARRANTY.** THE WARRANTIES SET FORTH IN SECTIONS 1 AND 2 HEREIN ABOVE ARE VOID IF YOU: TRANSFER THE PRODUCT TO A THIRD PARTY, MODIFY THE PRODUCT, MISUSE THE PRODUCT, SUBJECT THE PRODUCT TO ABNORMAL CONDITIONS OF OPERATION, ATTEMPT UNAUTHORIZED REPAIRS TO THE PRODUCT, DO NOT USE ORIGINAL EQUIPMENT MANUFACTURER (OEM) REPLACEMENT PARTS, DO NOT FOLLOW THE CARE AND USE INSTRUCTION MANUAL CONCERNING SPACE, ELECTRICAL AND ENVIRONMENTAL REQUIREMENTS, SUBJECT THE PRODUCT TO ACCIDENT, MISUSE OR MISAPPLICATION; OR SERVICE THE PRODUCT BY ANYONE OTHER THAN THE COMPANY OR AN AUTHORIZED SERVICE REPRESENTATIVE OF THE COMPANY OR DISTRIBUTOR

4. **WARRANTY RETURNS.** All warranty claims can be handled through the Company or Distributor. If you do not know the phone number of the Distributor, you can contact the Company at 1-877.307.8434 (toll free) or 317.217.1700 Monday through Friday from 9:00 AM to 5:00 PM EST. Warranty covered items are to be returned on a part for part replacement. All freight charges are the sole responsibility of the Purchaser.

5. **DISTRIBUTOR WARRANTIES.** To the extent representations, warranties or commitments are extended to the Purchaser by a Distributor, such representations, warranties and commitments will be those of the Distributor alone, and will not be attributed to the Company and the Company shall not be responsible for same.

6. **DISCLAIMER OF WARRANTIES.** EXCEPT AS EXPRESSLY STATED IN SECTION 1 AND 2 HEREIN ABOVE, THERE ARE NO OTHER WARRANTIES BY THE COMPANY OR DISTRIBUTOR, EXPRESSED OR IMPLIED, BY OPERATION OF LAW OR OTHERWISE. THE COMPANY AND DISTRIBUTOR DISCLAIM ALL IMPLIED AND EXPRESSED WARRANTIES, INCLUDING BUT NOT LIMITED TO ANY IMPLIED WARRANTY OF MERCHANTABILITY OR FITNESS FOR A PARTICULAR PURPOSE.

7. **LIMITATION OF LIABILITY.** THE COMPANY OR DISTRIBUTOR SHALL NOT BE LIABLE, WHETHER IN CONTRACT OR TORT, FOR ANY LOSS OR DAMAGE, INCLUDING BUT NOT LIMITED TO SPECIAL, INDIRECT, CONSEQUENTIAL, PROPERTY, ECONOMIC OR PERSONAL DAMAGES OF THE END USER, OR THIRD PARTIES, EVEN IF ADVISED OF THE POSSIBILITIES OF SUCH DAMAGES, ABOVE OR BEYOND THE REPAIR, REPLACEMENT OR REFUND OF ANY DEFECTIVE PRODUCT, WHICH SHALL BE THE PURCHASER'S SOLE REMEDY. THE PURCHASE PRICE OF THE PRODUCT IS A CONSIDERATION IN LIMITING THE COMPANY'S AND DISTRIBUTOR'S LIABILITY.

8. **LOCAL LAWS.** Laws pertaining to the rights and limitations of the Warranty vary from state to state. The limitations set forth herein may not be applicable to the Purchaser, or Purchaser may have other legal rights not referenced herein.

9. **MISCELLANEOUS**

   9.1 GOVERNING LAW. This Warranty shall be governed by, interpreted by and enforced in accordance with the substantive and procedural laws of the State of New Jersey, and the United States of America, conflict of laws notwithstanding. This Warranty and any such claims, disputes or actions is domiciled. The Company, Distributor and Purchaser hereby agree to submit to the subject matter and personal jurisdiction and venue of said courts to resolve any disputes. If any term or provision of this Warranty is adjudicated to be invalid by any Court have jurisdiction, such provision shall be inoperable and deemed omitted and shall not invalidate the remaining provisions hereof.

   9.2 ENTIRE AGREEMENT. This Warranty constitutes the entire agreement of the Purchaser, the Distributor and the Company as to the subject matter and there are no other understandings, agreements or terms, whether oral or written, between the Company and the Purchaser.

   9.3 READ AND UNDERSTAND THIS WARRANTY. Before signing and returning this warranty, the Purchaser acknowledges that Purchaser has read and understands the terms herein, or has had the opportunity to have them read and explained to the Purchaser by an authorized representative.

10. **VALIDATION.** To validate that you are the original purchaser of the Product from the Company or a Distributor and to ensure that you receive the above-recited benefits under the Warranty, please provide the information on the warranty card, sign the card and mail it within (30) days of purchase to:

    Warranty Department
    Laundries unlimited of Indiana, Inc.
    dba Tanning Supplies unlimited
    1504 Sadlier Circle South Drive
    Indianapolis; IN 46239

11. **SPARE AND REPLACEMENT PARTS.** Original Equipment Manufacturer's (OEM) lamps and replacement parts are available by direct order. To order, call 1-877.307.8434 (toll free) or 317.217.1700. Please have Credit Card information available when calling or write to:

    Tanning Supplies unlimited
    1504 Sadlier Circle South Drive
    Indianapolis; IN 46239

13. WARRANTY CARD

KBL 5600 α

warranty card	Company Name/Contact:	
Delivery Address	Street: _____ City, State: _____ Zip Code: _____ Phone: _____	
Model	o Electronic Power o CPI energy	
Serial #		
Design	Chassis color:	
aquaCool	o Yes	o No
Aroma	o Yes	o No
airCon Preparation	o Yes	o No
Exhaust air system	o Without o Exhaust air duct o Exhaust air duct hose (300mm, white, length 3m, 2 hose clamps)	
Mains voltage	o 3-phase	
Date of Install		
Installer Name and Address		
Voltages	L1/L2 _____ L2/L3 _____ L3/L1 _____	
Remarks		

Office Use Only: Date Received: _____ Received by: _____

Remarks

Remarks

Remarks

KBL

The Beauty & Health Company



Ringstraße 24-26
56307 Dernbach / Germany
fon: +49 (0) 26 89.94 26-0
fax: +49 (0) 26 89.94 26-66