circuit diagram

Tower pureEnergy 5.0

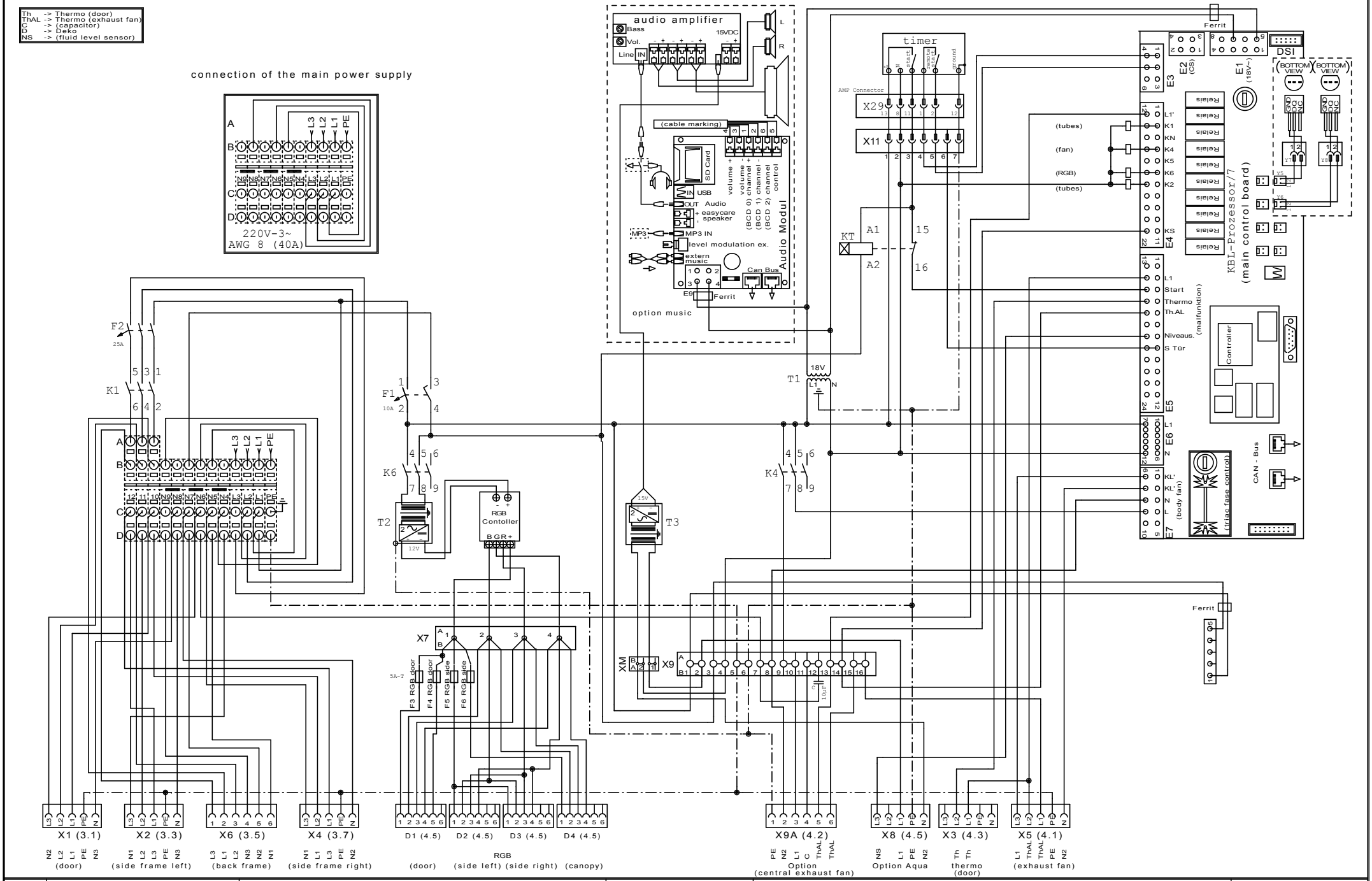

Datum	05.04.2017	MS Tower pE 5.0 US	KBL AG The Beauty & Health Company	Änderung vorbehalten subject to alternations
Name	R.Schmidt			
Vers.	Tower pE 5.0 US v13-0417			Blatt 2 von 5 Bl.

1	2	3	4	5	6	7	8

(door) (side frame left) (back frame) (side frame right)

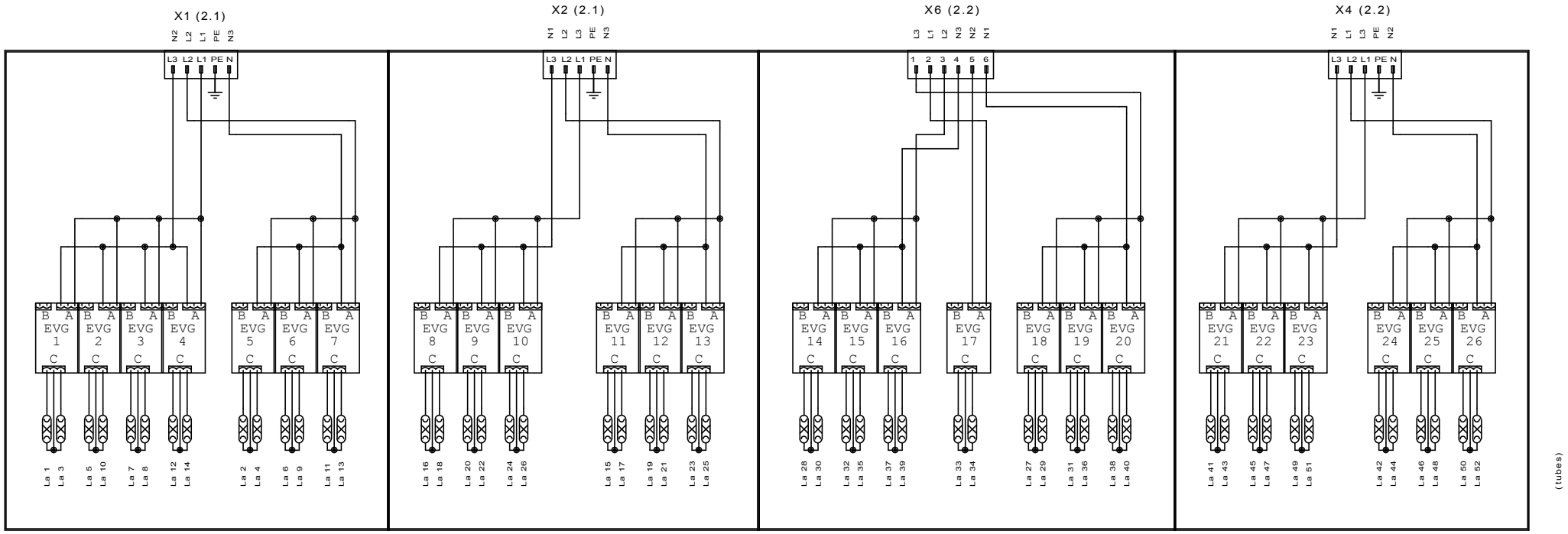

Datum	05.04.2017	MS Tower pE 5.0 US	KBL AG The Beauty & Health Company	Änderung vorbehalten subject to alternations
Name	R.Schmidt			
Vers.	Tower pE 5.0 US v13-0417			Blatt 3 von 5 Bl.

exhaust fan

X5 (2.7)

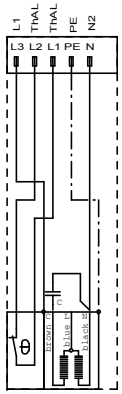

option
central exhaust air

X9A (2.5)

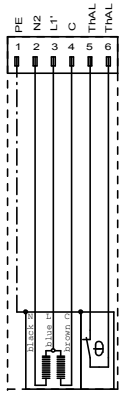

thermo door

X3 (2.6)

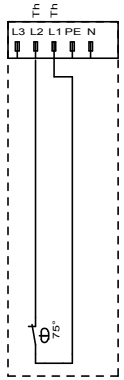

RGB

(door) D1(2.3)

(side left) D2(2.3)

(side right) D3(2.4)

(canopy) D4(2.4)

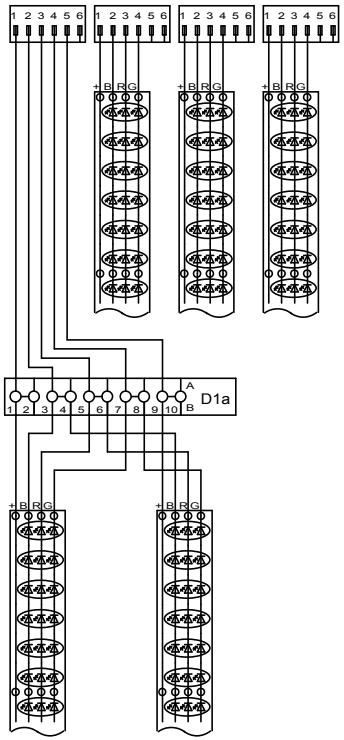

option
aquaCool, aroma

X8 (2.6)

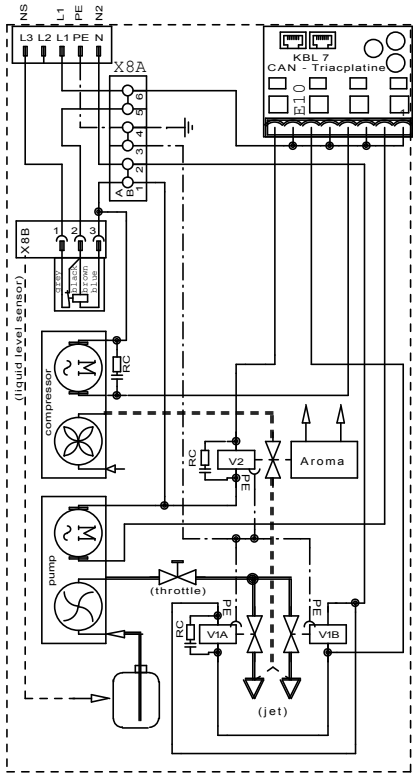

Datum	05.04.2017
Name	R.Schmidt
Vers.	Tower pE 5.0 US v13-0417

MS Tower pE 5.0 US

KBL AG
The Beauty & Health Company

Änderung vorbehalten
subject to alternations

tube position

top view

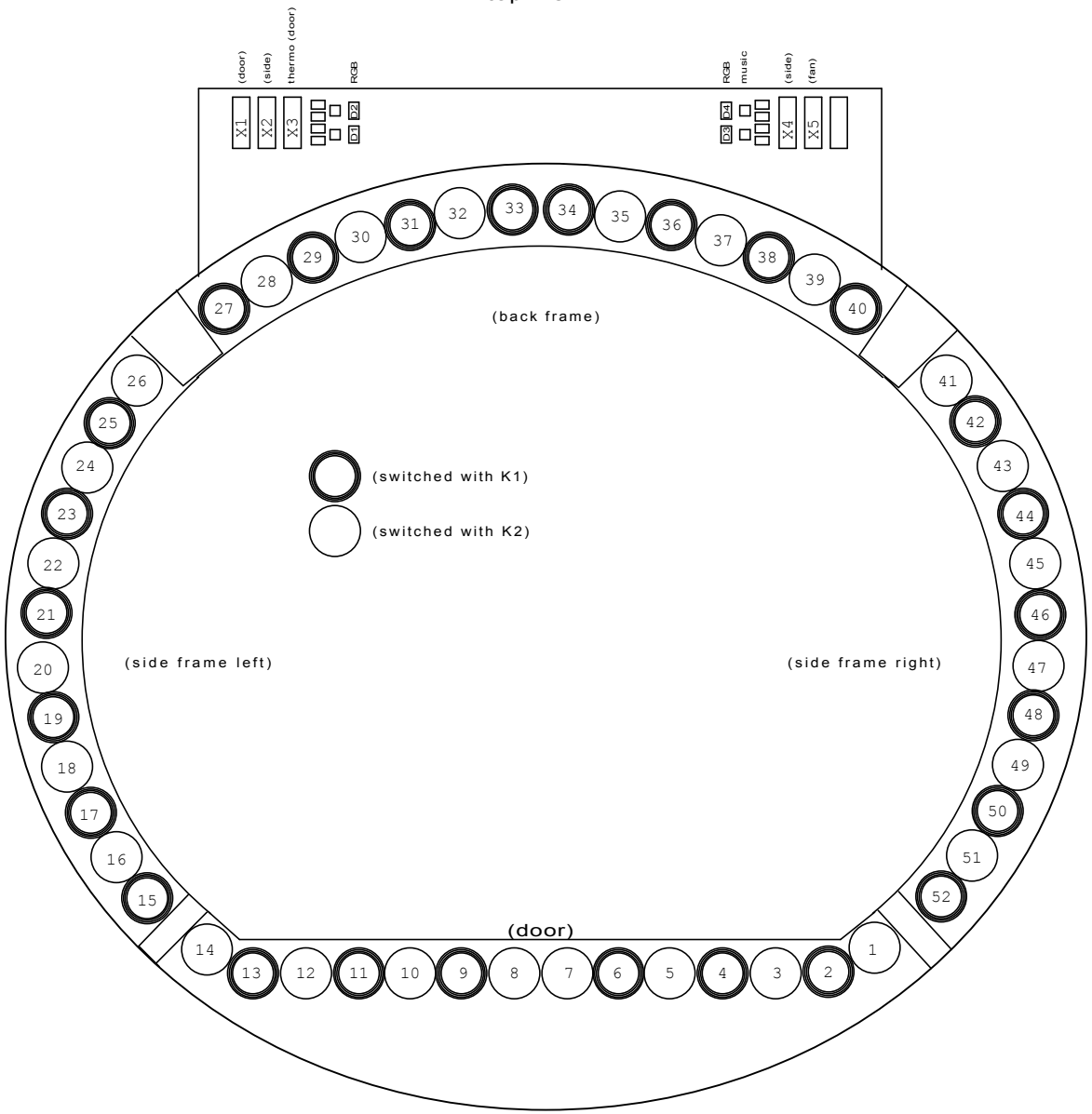

ballast position

interior view

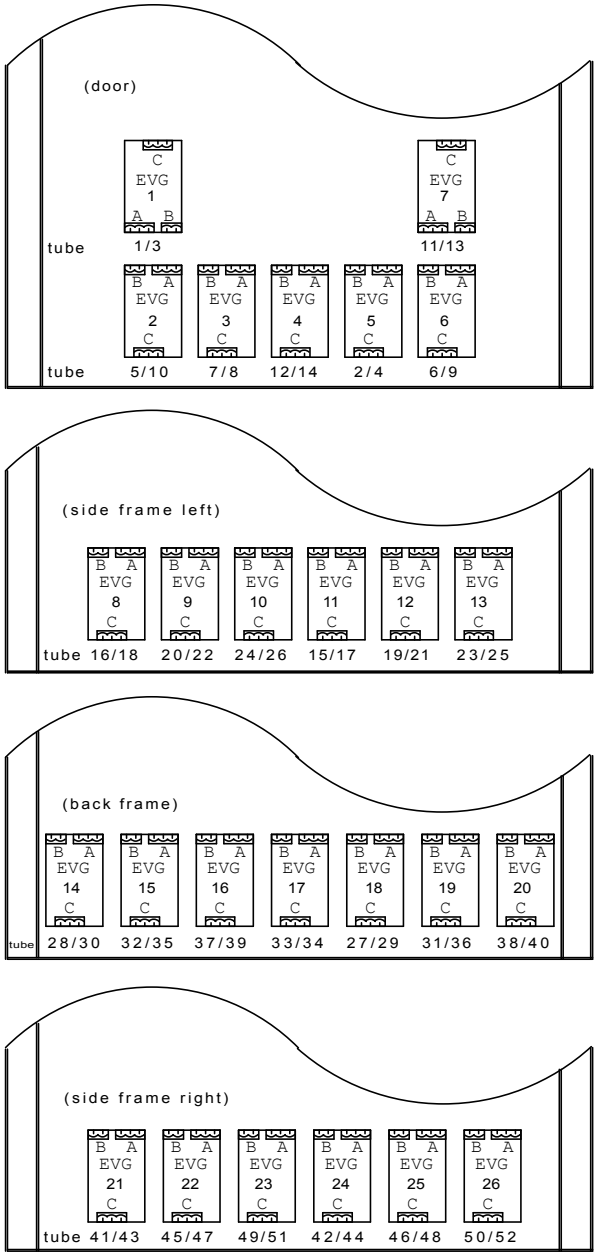

Datum	05.04.2017	MS Tower pE 5.0 US	KBL AG The Beauty & Health Company	Änderung vorbehalten subject to alternations
Name	R.Schmidt			
Vers.	Tower pE 5.0 US v13-0417			Blatt 5 von 5 Bl.