KBL

Tower pureENERGY 5.0

PRODUCT LINE



TANNING DEVICE

OPERATING INSTRUCTIONS

Copyright and Trademark

© Copyright 2023 KBL GmbH

This documentation only covers products manufactured by KBL GmbH. It must not be duplicated, photocopied, translated or stored without prior special consent by KBL GmbH. Duplication on electronic media or in a machine readable form, either in whole or in part, is also prohibited.

KBL is a registered trademark of KBL GmbH.

DISCLAIMER

All information given in this document correspond to the status quo at the date of publication but may be subject to changes. Therefore, we do not accept any liability for, nor do we guarantee the accuracy and/or completeness of the information.

EXPORT

Technical equipment and versions of the devices are in accordance with the legal prescriptions of the respective country of destination. Export to the European Union of the KBL products, listed in this guide, or operation of the systems in these countries, are not permitted. KBL does not accept any manufacturers liability in case this direction is not adhered to. It is expressly pointed out that any violation of the export/operation prohibition will involve substantial risks of liability for the exporter and/or operator.

ORIGINAL OPERATING INSTRUCTIONS
Version: BA-pureEnergy50-T5213-TSU-en-us
Date: August 2023
Item no.: 0100036618 I
Tannig device name [tech.]: T5213

MANUFACTURER
KBL GmbH
Ringstraße 24-26 · 56307 Dernbach · Germany

DISTRIBUTED BY (CONTACT)
Laundries unlimited of Indiana, Inc.
dba Tanning Supplies unlimited.
1504 Sadlier Circle South Drive;
Indianapolis; IN 46239, U.S.A.
1-877-307-8434 (toll free) or 317-217-1700

Contents

1. Labels attached to the tanning device 5

2. General information 6
2.1 About these instructions 6
2.2 Safety signs 6
2.3 Signal words 6
2.4 Definitions 7
2.5 Transport 7
2.6 Environmental regulations 7
(disposal of lamps) 7
2.7 Service 8
2.8 Updating system software 8
2.9 Setup location 8
2.10 Commissioning 9
2.11 Obligations of the studio operator 10
2.12 Training of staff 10
2.13 Technical modifications 10
2.14 Instruction updates 10

3. Safety notes 11
3.1 General safety notes 11
3.2 Duties of the operator 11
3.3 Intended use 12
3.4 Indications for use 12
3.5 Contraindications 12
3.6 Warnings 12
3.7 Foreseeable misuse 12
3.8 Timer controlled operation 13
3.9 Guidelines for the use of prot. eyewear 13
3.10 Freeing a trapped person 13
3.11 Wearing a hair net 13
3.12 Use of headphones 14
3.13 Lamp breakage 14
3.14 Plug connections 14
3.15 Exhaust air connection 14

4. Description of the tanning device 15
4.1 Standards 15
4.2 Components 18
4.3 Air outlet modes 19

5. Connections 20
5.1 Class I ME equipment 20
5.2 Overview supply connections 20
5.3 Connecting the mains voltage 20
5.4 Connecting an external audio source 21
5.5 Level adjustment studio music signal 21
5.6 Operation using different audio sources 22
5.7 Bluetooth connection 22
5.8 Connecting the channel selection 23
5.9 Connecting the external timer 24
5.10 aquaCool box connections 24
5.11 Connections aquaCool box /tower 24

6. Start-up 25
6.1 Operating modes 25

7. Tanning instructions 26
7.1 Instructions for the user 26
7.2 Exposure schedule 27

8. Tanning mode 28
8.1 Starting the tanning session 28
8.2 Operation during the tanning session 28
8.3 Basic functions 30
8.4 Variable section of the interior control panel 30

9. Standby mode 32
9.1 Service mode 32
9.2 Standby functions 32
9.3 Set decorative lighting 33

10. Maintenance and cleaning 34
10.1 Instructions on cleaning, disinfection and care 35
10.2 Maintenance intervals 38
10.3 Tools and aids 39
10.4 Acrylic panes 39
10.5 Tubes 40
10.6 Interior unit lighting 41
10.7 Recording to an SD card 41
10.8 Replacing the aquaCool canister 42
10.9 Replacing the aquaCool nozzles 43

11. System messages 44

12. Technical Data 46
12.1 Dimensions and distances 47

13. Implied warranty 49

14. WARRANTY CARD 50

1. Labels attached to the tanning device

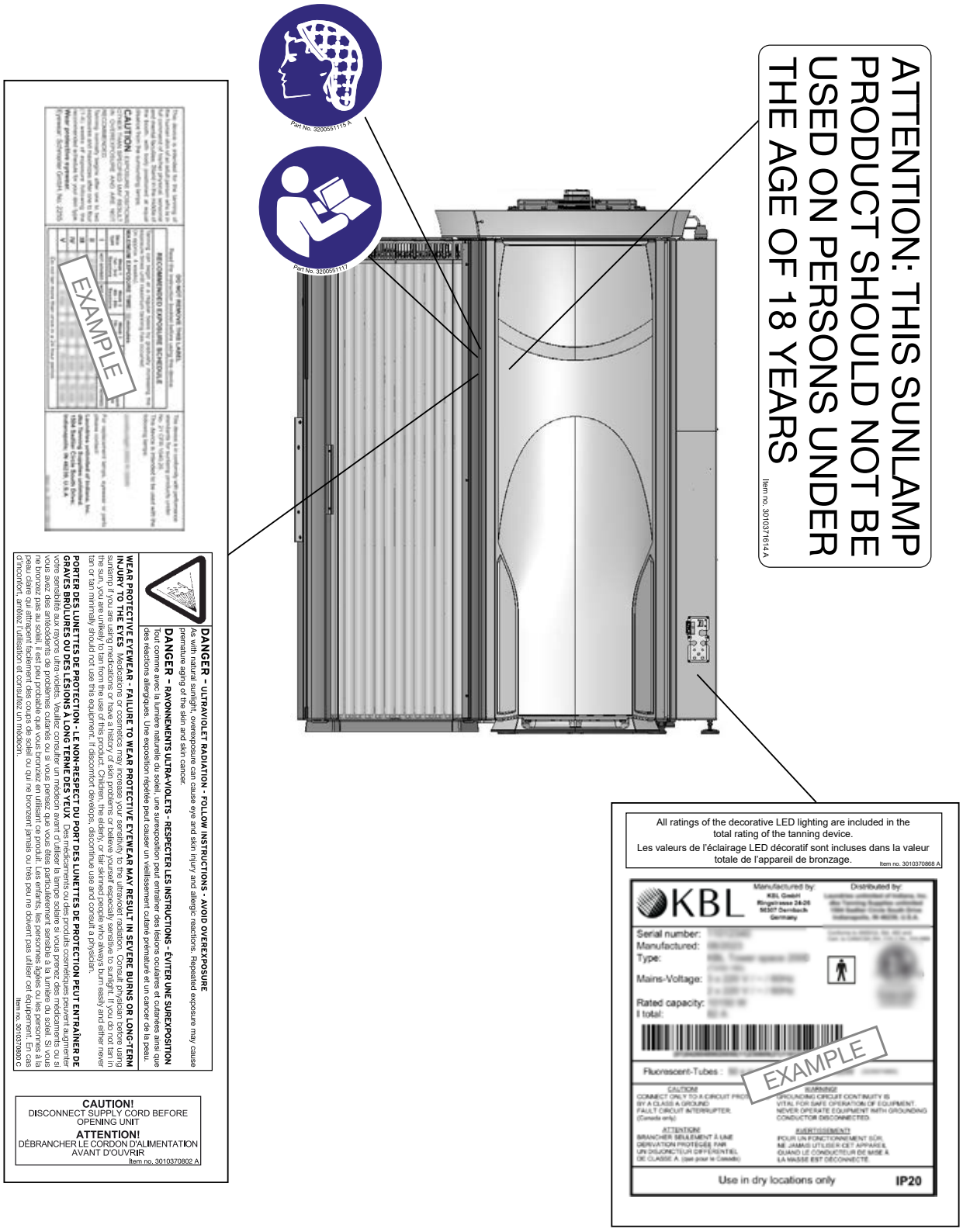

2. General information

2.1 About these instructions

This operating manual is intended for use by

- studio operator,
- user,
- staff,
- qualified, trained and authorized service technician.

Any person dealing with this KBL Sunlamp Product (hereafter referred to as tanning device) must have read and understood these instructions.

This manual describes tanning devices equipped with the maximum number of features.

Keep this manual ready to hand at all times.

2.2 Safety signs

	This symbol indicates that general hazards exist for the human health.
	This symbol indicates that due to electrical tensions hazards exist to the human health.
	This symbol indicates that due to UV radiation hazards exist to the human health.
	This symbol indicates that due to falling loads hazards exist to the human health.
	This symbol indicates the danger of pinching. When closing and opening panels and covers, you can pinch your hands.
	This symbol indicates the danger of burns from hot lamps and housing parts. If the tanning device was operated before being switched off and opened, lamps and housing parts may be hot.
	This symbol indicates that damages may occur at the tanning device, at the material or at the environment.
	This symbol indicates the type BF applied part.

IMPORTANT INFORMATION

	This symbol does not identify safety notices, but states information for a better understanding.

2.3 Signal words

DANGER

- Death or serious injury is imminent.

WARNING

- Death or serious injury is possible.

CAUTION

- Moderate or minor injury is possible.

2.4 Definitions

STUDIO OPERATOR

People who provide tanning devices to users on a commercial basis. The studio operator is trained to operate and maintain the tanning device. He is responsible for the proper operation of the tanning device as well as for compliance with the maintenance intervals.

USER

A person who uses the tanning device.

STAFF

People who are responsible for the operation, cleaning and disinfection as well as for the general maintenance work and instruction of the user on how to operate the tanning devices.

QUALIFIED, TRAINED AND AUTHORIZED SERVICE TECHNICIAN

Qualified staff who have been trained and authorized by the manufacturer for assembly and maintenance work with specific device.

2.5 Transport



⚠ WARNING

Overturning load

Danger of being crushed by heavy parts of the equipment.

- Keep the safety distance to the transport machine.
- Do not walk under the load.
- Wear safety shoes.

TRANSPORT BY FORKLIFT TRUCK



During transport the tanning device may be damaged when using forklift forks that are too short.

- Use only sufficiently long forks.

The box with the tanning device components is mounted on a pallet.

- Insert the forks carefully into the openings of the pallet.
- Lift the load by a few centimeters.
- Transport the load carefully to the place of installation.

OTHER MODES OF TRANSPORT

If a forklift truck cannot be used for transport, the box must be unpacked and the parts inside must be transported individually to the place of installation, e.g. using a dolly. Depending on the weight of the components, lifting them might require several people.

2.6 Environmental regulations (disposal of lamps)

Fluorescent lamps contain fluorescent materials and other waste products containing mercury. Some areas of the USA and Canada have specific regulations regarding disposal of these waste. Please check the laws in your area and act in accordance with municipal waste regulations. Please retain proof of proper disposal of lamps. Your local regulatory agency can assist you with the disposal of lamps. Report the number of lamps to your local agency by telephone or in writing. The regulatory agency can provide you with a delivery point for your lamps or will take care, in conjunction with a disposal company, of the collection and proper disposal of the lamps (Fees for this may apply). Please contact your code enforcement officials for more information regarding laws governing disposal of these components in your area.

2.7 Service

REPAIRS - SERVICE - REPLACEMENT - PARTS AND LAMPS - EYE PROTECTION

If you are in need of any of the above mentioned products or services, you should contact:

Laundries unlimited of Indiana, Inc.
dba Tanning Supplies unlimited.
1504 Sadlier Circle South Drive;
Indianapolis; IN 46239, U.S.A.
1-877-307-8434 (toll free) or 317-217-1700

NOTE: All repairs and replacement components including, but not limited to protective eyewear, lamps, timers and acrylic must be in compliance with CFR 21 1040.20.

ACCESSORY PARTS

Description	KBL item no.
Protective eyewear	3010104000

Technical documentation like operating and assembly instructions as well as diagrams and original spare parts can be provided by KBL.

2.8 Updating system software



Risk of damage by switching off the power supply voltage.

Disconnecting power supply during the update process, will lead to damage of electronic components.

- Make sure that the tanning device is not disconnected from the power supply voltage during the update.

To accomplish the update download the “USB-Connect” software offered by KBL. For detailed information press the help-button in the main menu.

2.9 Setup location

OPERATION IN MOBILE FACILITIES



CAUTION

Crushing hazard caused by sudden movements

The tanning device is unsuitable for operation in mobile facilities (buses, trains, ships).

- The tanning device must be adapted in order to ensure trouble-free operation when used in mobile facilities.

DANGER OF OVERHEATING BY OBSTRUCTION OF THE AIRFLOW

Avoid in any case a change, obstruction or blockage of the air inflow and outflow area to the tanning device or to make any unauthorized changes to the tanning device. The manufacturer shall bear no liability for damage or injuries resulting from such actions.

- Comply with the ventilation information to avoid serious system malfunctions.
- Only use OEM spare parts of the same type! The use of other parts will void the manufacturer’s warranty!
- Maintain the minimum distances from ceiling, bottom and the walls! Dimensions are given in chapter *technical data*.



Insufficient air supply leads to overheating which may result in damaging the tanning device!

EXPLOSIVE ATMOSPHERE



DANGER

Explosive atmosphere

Operation in explosive atmospheres can cause explosions.

- Do not operate the tanning device in an explosive atmosphere.

SALTY AIR - CONTAMINATED AIR

Salty air, contaminated air may lead to corrosion of the housing and electrical components. **Damage to the tanning device possible!**

- Do not operate the tanning device in locations with aggressive environmental conditions (e.g. air containing chlorine).
- Do not install the tanning device at swimming pools.

ELECTROMAGNETIC ENVIRONMENT

Do not use near (24 inches or closer) equipment sensitive to electromagnetic interference.

This tanning device complies with International Standards (as set forth in manufacturer's declaration following) for electromagnetic compatibility for medical electrical equipment and/or systems.

These standards are designed to provide reasonable protection against harmful interference in a typical medical installation.

However, because of the proliferation of radio-frequency transmitting equipment and other sources of electrical noise in healthcare and other environments, it is possible that high levels of such interference due to close proximity or strength of a source might disrupt the performance of this tanning device. Medical electrical equipment needs special precautions regarding EMC, and all equipment must be installed and put into service according to the EMC information specified in this manual *(chapter 4.1)*.

DIFFERENCE IN TEMPERATURE

Risk of damage by switching on the power supply voltage.

When there are great differences in temperature between the transportation route and the installation site the tanning device shall not be put into operation immediately after being set up.

- Before connecting the tanning device to the power supply, wait at least for 2 hours.

2.10 Commissioning

DANGER

Damaged mains power cable

Risk of death or fatal injury due to electric shock when touching a damaged mains power cable.

- Only the manufacturer or specialized companies may replace the mains power cable!

Initial commissioning will be carried out by the manufacturer's own service technicians or by qualified, trained and authorized service technicians. The tanning device will be handed over ready for use.

As studio operator it is your responsibility to observe the electrical regulations applicable at the installation site.

The tanning device incorporates special preventive measures with regard to the electromagnetic compatibility and must be installed and commissioned according to the EMC instructions obtained from this operating instructions.

If the tanning device has not been used for a longer period of time, then it must first be inspected by qualified, trained and authorized service technicians, before being put back into operation again.

Ensure no electromagnetic compatibility issues with the siting *(chapter 4.1)*.

2.11 Obligations of the studio operator

- The studio operator is responsible for informing users on possible risks of tanning.
- All danger and safety labels attached to the tanning device must be observed and shall not be removed!
- The tanning device shall only be used when in proper operational condition!
- The studio operator is responsible to ensure that the tanning device is handled properly.
- No safety equipment (e.g. thermal switch) shall be removed, deactivated, or otherwise bypassed as it may impair the safe operation of the tanning device!
- The electrical installation must be equipped with a freely accessible all-pole disconnecting device (Master switch with clearly marked on/off settings e.g. “O” and “I” or additional indicator light). The master switch shall be fitted externally on the side of the tanning booth, so the operator can access it at any time, even when the tanning device is in operation.
- Site the tanning device in such a way as the MAINS ON/OFF switch and the MAINS supply cable are not obstructed (difficult to access).

2.12 Training of staff

The studio operator is obligated to train his staff and to instruct them in the established legal and accident prevention regulations. He must ensure that his staff has understood and observes these instructions. This includes:

- Operating instructions.
- Safety instructions.
- Information regarding intended use and foreseeable misuse.
- Cleaning/disinfection and maintenance instructions.

- The instructions and additional information from the manufacturer must be available to the staff at their workplace. Regularly test your staff‘s safety consciousness and awareness of the risks, taking into account the operating instructions of the tanning device.
- Make sure that the cleaning/disinfection intervals are complied with, especially the cleaning and disinfection of the tanning device after every use.
- Make sure that your staff provides the customers with appropriate advice, especially regarding tanning times, possible risks and the operation of the tanning device.

2.13 Technical modifications

The tanning device has been constructed in accordance with current safety regulations.
The specifications and illustrations on these instructions are subject to technical modifications which are required in order to improve the tanning device.

- Unauthorized modifications and changes to the tanning device are forbidden.
- Use only OEM spare parts!

2.14 Instruction updates



Use the current tanning device documentation

The tanning device documentation is updated regularly by the manufacturer. Make sure you are using the latest version.

For instruction updates, please contact:

Laundries unlimited of Indiana, Inc.
dba Tanning Supplies unlimited.
1504 Sadlier Circle South Drive;
Indianapolis; IN 46239, U.S.A.
1-877-307-8434 (toll free) or 317-217-1700

3. Safety notes

3.1 General safety notes

Read the operating instructions before using the tanning device.

This tanning device must be operated with an external timer as specified in chapter *Timer controlled operation*.

NOTE: This tanning device is intended to be used by only one adult person at a time. Therefore, only one (1) pair of protective eyewear is provided with each KBL tanning device. Use protective eyewear whenever the tanning device is operated. Read related operating instructions in chapter *Guidelines for the use of protective eyewear*.

Do not tan more than once in a 24 hour period. Tanning results normally occur after a few sessions and increase after four (4) weeks of regular exposure. Follow the exposure schedule in accordance with your skin type as specified in chapter *Exposure schedule.* Failure to do so may result in overexposure. However, regardless of how dark an individual may tan on this tanning device, it will not provide adequate protection against overexposure to natural sunlight or UVB tanning devices.

SKIN TYPE II - This is the individual that usually burns easily and severely, tans minimally or lightly and peels.

SKIN TYPE III - Often referred to as „AVERAGE“ complexion. Burns moderately and tans about average.

SKIN TYPE IV - This individual burns minimally, tans easily and above average with each exposure.

SKIN TYPE V - This individual rarely burns, tans easily and substantially.

FURTHER INSTRUCTIONS



WARNING

No modification of this equipment is allowed.

- Follow all instructions given in this manual. In addition to that, observe all applicable statutory provisions and regulations, also those applicable in the country of operation.
- The tanning device may only be installed and assembled by qualified, trained and authorized service technicians.
- Observe all danger signals and safety signs attached to the equipment.
- Safety signs must not be removed, and safety appliances must not be disabled.
- The tanning device may only be operated when in perfect working condition.
- Never operate the tanning device with the outer covering removed or with the acrylic panes removed.
- Pay attention to the load limit of the floor plate (tower devices only).
- Under no circumstances the ceiling fan shall be connected to any air duct or vent.

3.2 Duties of the operator

The manufacturer cannot be held liable for damages or injuries resulting from improper use of the equipment or non-observance of these operating instructions.
Only use original spare parts, otherwise operating authorization and terms of guarantee will become invalid.

3.3 Intended use

This sunlamp product is a tanning device intended for the tanning of the human skin of an adult person who is in full command of his/her physical, sensorial and mental faculties. Moreover, sufficient knowledge and experience are required.

Wear protective eyewear to block UV radiation during tanning.

Stand in the middle of booth, with body positioned an equal distance from the surrounding lamps.
CAUTION: THE USE OF ANY OTHER POSITION MAY RESULT IN OVEREXPOSURE.
You must reach the interior control panel at all times during the tanning.

3.4 Indications for use

This sunlamp product is an over-the-counter tanning device emitting ultraviolet light in the UVB and UVA region of the spectrum intended for tanning of the human skin of an adult person.

3.5 Contraindications

Any adult person listed here after may not use this sunlamp product. If in doubt consult a physician.

This sunlamp product is contraindicated for use on persons under the age of 18 years.
This sunlamp product must not be used

- if skin lesions or open wounds are present.
- by persons wearing heart pacemakers.
- by persons prone to sunburn (skin type I).
- by persons already suffering from sunburn.
- by persons taking medicines.
- by persons taking photosensitive medications.
- by persons, who had several severe sunburns as children.
- by persons, who are being treated by a physician for conditions associated with photosensitivity.
- by persons, who are prone to freckles.
- by persons with atypical discolored skin areas or/and with more than five atypical moles with a diameter of 5 millimeters or more and persons with more than 16 moles with a diameter greater than or equal to 2 millimeters. If in doubt, consult a physician!
- by persons with naturally red hair color.
- by persons, who do not tan at all or cannot tan without getting sunburn.

3.6 Warnings

- This sunlamp product should not be used on individuals who have had skin cancer or have a family history of skin cancer.
- Persons repeatedly exposed to ultraviolet sunlamp products should be regularly evaluated for skin cancer.

3.7 Foreseeable misuse

- This sunlamp product is not designed to be used by persons with reduced physical, sensory or mental abilities and/or with a lack of experience or insufficient knowledge.
- During the operation no other person shall be in the radiation range of the sunlamp product.
- Children, should be supervised to make sure that they do not use the sunlamp product as a toy.
- The irradiation of animals, especially reptiles.
- Any type of use that differs from the provisions under the chapter *Safety notes* is considered misuse.

3.8 Timer controlled operation

This sunlamp product must be operated with an external timer that is listed in compliance with UL 917.
If the external timer fails, the sunlamp product is automatically switched off by an internal timer after the TE-time of the respective type of sunlamp product.
The maximum tanning time must not be exceeded.

- The exposure times stated in the exposure schedule must be entered at the external timer.
- Information on how to enter the exposure time can be found in the operating instructions of your external timer.

Accessory equipment connected to the analog and digital interfaces must be certified to the respective IEC standards (i.e. IEC 60601-1 for medical equipment). Furthermore all configurations shall comply with the system standard IEC 60601-1-1.

3.9 Guidelines for the use of protective eyewear

Before use, the length of the elastic strap must be adjusted to the required head size. For maximum protection to elevate stray light, the eye protection must fit securely and comfortably on the eyelids. If there is any stray light from the sides or under the rim of the lens, DO NOT USE this eye protection. Ask the staff to recommend an alternative eye protection.
Never use eye protection lenses that are broken, cracked, bleached out, or otherwise damaged.
For cleaning the protective eyewear refer to chapter *Instructions on cleaning, disinfection and care*.

3.10 Freeing a trapped person

Regardless of the operating state (stand by or in operation) of the tanning device, the door can be opened manually from the inside or the outside easily and with very little effort, any time.
The door drive mechanism is a purely mechanical function that does not depend on electrical power.

3.11 Wearing a hair net

WARNING

Risk of serious head injury

Risk of serious head injury due to catching hair in the ceiling fan.

- Studio clients with long hair must wear hair nets during tanning sessions to ensure safety.

3.12 Use of headphones

CAUTION

Hearing damage possible

Using headphones or earphones at high volume may result in permanent hearing damage.

- Do not set the volume too high.

3.13 Lamp breakage

CAUTION

Risk of mercury toxicity

Risk of mercury toxicity after a lamp breakage. Please comply with the following instructions:

- you must immediately disconnect the tanning device from the mains power.
- have children immediately leave the room.
- you must ventilate the room for at least 15 minutes.
- put on disposable gloves.
- open the window first, then collect the glass shards and escaped mercury and put it into a sealable container.
- bring the container to a collection site for waste lamps.

3.14 Plug connections

When installing connectors during installation or maintenance work, make sure that all connectors are plugged into the socket housing to the end stop.

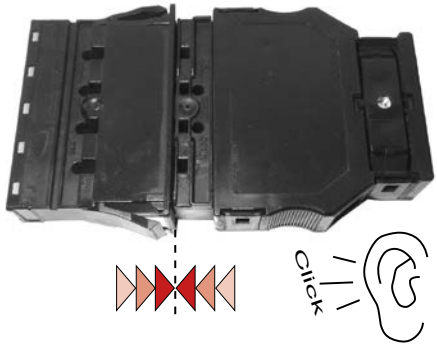

3.15 Exhaust air connection

Danger of overheating

Under no circumstances the ceiling fan shall be connected to anything!

- Free and unobstructed airflow required.
- Do not connect any air duct or vent to the ceiling fan.

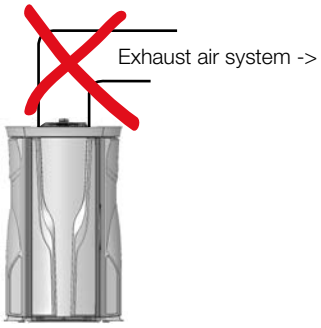

4. Description of the tanning device

4.1 Standards

This tanning device is in conformity with performance standards 21 CFR 1040.20 and the standards for electromagnetic compatibility IEC 60601-1-2:2014 and EN 60601-1-2:2015 (EMC):

EN61000-3-2; EN61000-3-3; EN60601-1-2; EN55011; EN61000-4-2; EN61000-4-3; EN61000-4-4; EN61000-4-5; EN61000-4-6; EN61000-4-8; EN61000-4-11.

According to CISPR 11 the electromagnetic emission characteristic of this tanning device is classified in Group1 and Class A.

The emission characteristics of this device make it suitable for use in industrial areas and hospitals (CISPR 11 class A). If it is used in a residential environment (for which CISPR 11 class B is normally required) this device might not offer adequate protection to radio-frequency communication services. The studio operator might need to take mitigation measures, such as relocating or re-orienting the equipment.

See EMC Tables according to IEC 60601-1-2:2014 and EN 60601-1-2:2015.

If, at any point, you determine that the ESSENTIAL PERFORMANCE of the tanning device has been impaired (due to electro-magnetic interference or other causes), then terminate installation / operation and consult the factory before continuing.

Table 1

Guidance and Manufacturer's Declaration - Electromagnetic Emission		
The tanning device is intended for use in the electromagnetic environment specified below. The studio operator of the tanning device should assure that it is used in such an environment.		
Emission tests	**Compliance**	**Electromagnetic environment - Guidance**
RF emissions according to CISPR 11	Group 1	The tanning device uses RF energy exclusively for its internal FUNCTION. Therefore, its HF emissions are very low and not likely to cause any interference in nearby electronic equipment.
RF emissions according to CISPR 11	Class A	The tanning device is intended for use in facilities other than residential areas, and for facilities that are directly connected to a public low-voltage supply system that also supplies residential buildings.

Table 2

Guidance and Manufacturer's Declaration – Electromagnetic Immunity to Interference			
The tanning device is intended for use in the electromagnetic environment specified below. The studio operator of the tanning device should assure that it is used in such an environment.			
Immunity tests	**IEC 60601- Test level**	**Compliance level**	**Electromagnetic environment - Guidance**
Electrostatic discharge according to IEC 61000-4-2	± 8 kV contact discharge ± 15 kV air discharge	+/- 8 kV contact discharge +/- 15 kV air discharge	Floors should be made of wood or concrete or be covered with ceramic tiles. If floors are covered with synthetic material, the relative humidity needs to be at least 30 %.
Fast transient electrical disturbances/bursts according to IEC 61000-4-4	± 2 kV for power-supply lines ± 1 kV for input and output lines	± 2 kV for power-supply lines ± 1 kV for input and output lines	Mains power quality should be that of a typical industrial or hospital environment.
Surge voltages (surges) according to IEC 61000-4-5	± 1 kV differential mode voltage ± 2 kV common mode voltage	± 1 kV differential mode voltage ± 2 kV common mode voltage	Mains power quality should be that of a typical industrial or hospital environment.
Voltage dips, short interruptions and voltage variations on power-supply input lines according to IEC 61000-4-11	Dips 0% for 1 cycle 70% for 25/30 cycles Interrupts 0% for 250/300 cycles	Dips 0% for 1 cycle 70% for 25/30 cycles Interrupts 0% for 250/300 cycles	Mains power quality should be that of a typical industrial or hospital environment. If the studio operator of the tanning device requires continuous operation of the device even in the event of interruptions of the power supply, it is recommended that the tanning device is powered by an uninterrupted power supply unit.
Power-frequency (50/60 Hz) magnetic field according to IEC 61000-4-8	30 A/m	30 A/m	Power-frequency magnetic fields should be at levels characteristic of a typical location in a typical industrial or hospital environment.

Table 4

Guidance and Manufacturer's Declaration – Electromagnetic Immunity to Interference			
The tanning device is intended for use in the electromagnetic environment specified below. The studio operator of the tanning device should assure that it is used in such an environment.			
Immunity tests	**IEC 60601-Test level**	**Compliance level**	**Electromagnetic environment - Guidance**
			Portable and mobile RF communications equipment should be used no closer to the tanning devive, including cables, than the recommended separation distance calculated from the equation applicable to the frequency of the transmitter. Site the device a miniumum of 24 inches from any other electrical / electronical devices to mitigate electro-magnetic efforts between devices
Conducted RF disturbances according to IEC 61000-4-6	3 V_{eff} 150 kHz to 80 MHz 10 V_{eff} 150 kHz to 80 MHz	3 V_{eff} 150 kHz to 80 MHz 10 V_{eff} 150 kHz to 80 MHz	Site the device a miniumum of 24 inches from any other electrical / electronical devices to mitigate electro-magnetic efforts between devices
Radiated RF disturbances according to IEC 61000-4-3	10 V/m 80 MHz to 1,0 GHz 10 V/m 1,4 GHz to 2,0 GHz 10 V/m 2,0 GHz to 2,7 GHz	10 V/m 80 MHz to 1,0 GHz 10 V/m 1,4 GHz to 2,0 GHz 10 V/m 2,0 GHz to 2,7 GHz	
			Field strengths from fixed RF transmitters, as determined by an electromagnetic site survey [a] shall be lower than the compliance level in all frequency ranges. Interference may occur in the vicinity of equipment marked with the following symbol: 
[a] Field strengths from fixed transmitters, such as base stations for radio telephones and land mobile radios, amateur radio, AM and FM radio and TV broadcast cannot be predicted theoretically with accuracy. To assess the electromagnetic environment due to fixed RF transmitters, an electromagnetic site survey should be considered. If the measured field strength in the location in which the tanning device is used exceeds the applicable RF compliance level above, The tanning device should be observed to verify normal operation in every location of use. If abnormal performance is observed, additional measures may be necessary, such as reorienting or relocating the tanning device unit.			

Table 6

Recommended separation distances between portable and mobile RF communications equipment and the tanning device
The tanning device is intended for use in an electromagnetic environment in which radiated RF disturbances are controlled. Site the device a miniumum of 24 inches from any other electrical / electronical devices to mitigate electro-magnetic efforts between devices.

4.2 Components

The tanning device basically consists of the following components:

- Two side parts, comprising 12 tubes each.
- Rear part including 14 tubes.
- Door including 14 tubes.
- Ceiling including fan and interior control panel.
- Base plate.
- Central exhaust air module ⑫ (optional equipment).

①	Door
②	Door handle
③	Ceiling grab handle with the integrated interior control panel.
④	Ceiling fan
⑤	Top crown
⑥	Rear wall
⑦	Lateral part
⑧	Floor plate

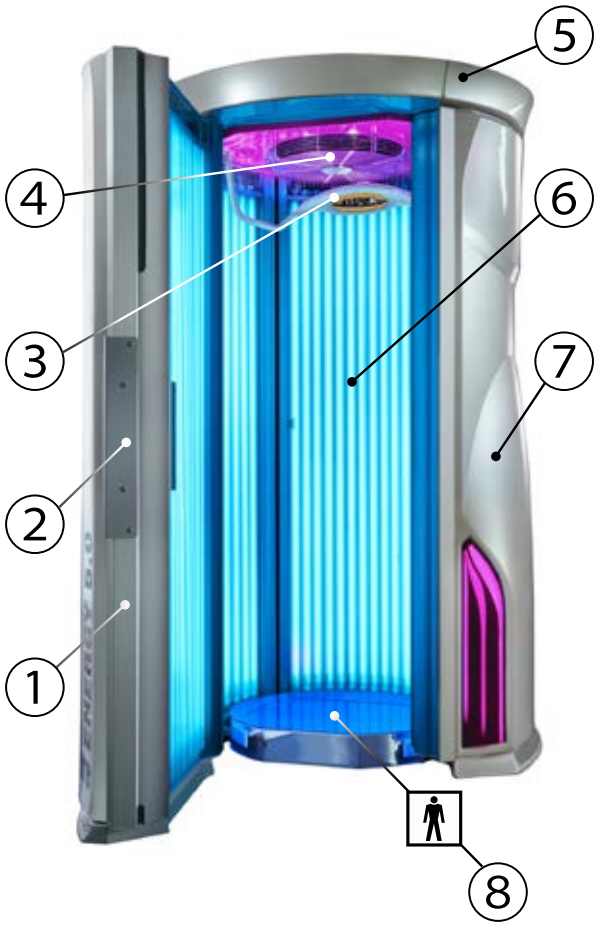

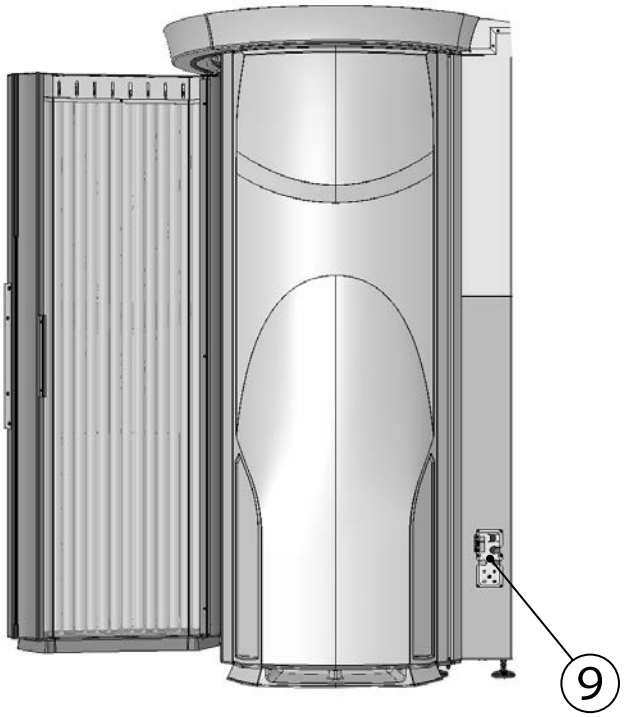

⑨	Supply connections
⑩	Mobile phone holder
⑪	aquaCool nozzles

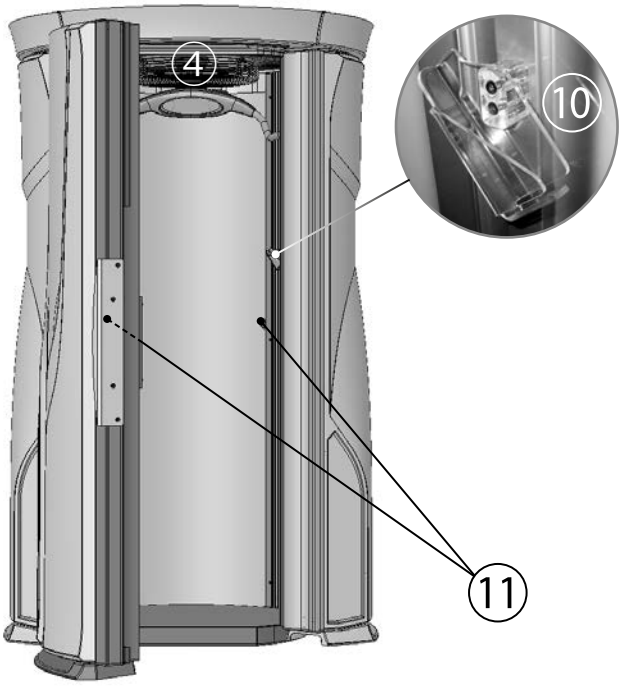

4.3 Air outlet modes

Danger of overheating

Under no circumstances the ceiling fan shall be connected to anything!

- Free and unobstructed airflow required.
- Do not connect any air duct or vent to the ceiling fan.

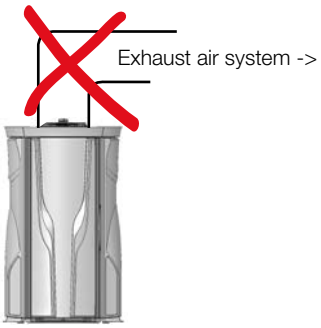

STANDARD MODE

In the standard operating mode (circulating-air), ventilation takes place exclusively via the ceiling fan ④.

- Operating the tanning device in standard mode is only permitted in rooms with adequate ventilation.
- Please take note of the information on and ensure minimum room hight (*technical data*).

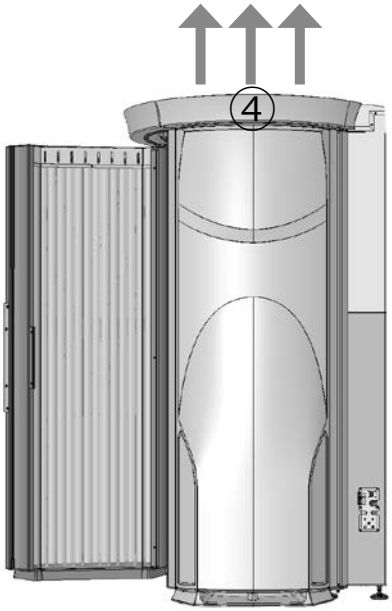

CONNECTED TO EXTERNAL EXHAUST AIR SYSTEM

Danger of overheating by use of non-original parts for exhaust air connection.

The tanning device may only be connected to an external exhaust air system, air duct or vent, by using the original KBL central exhaust air module ⑫ (mounted to the back of the tanning device) optionally available..

- At ALL TIMES, **a free** and unobstructed air flow of the ceiling fan ④ must be ensured to avoid overheating and damage to the tanning device!

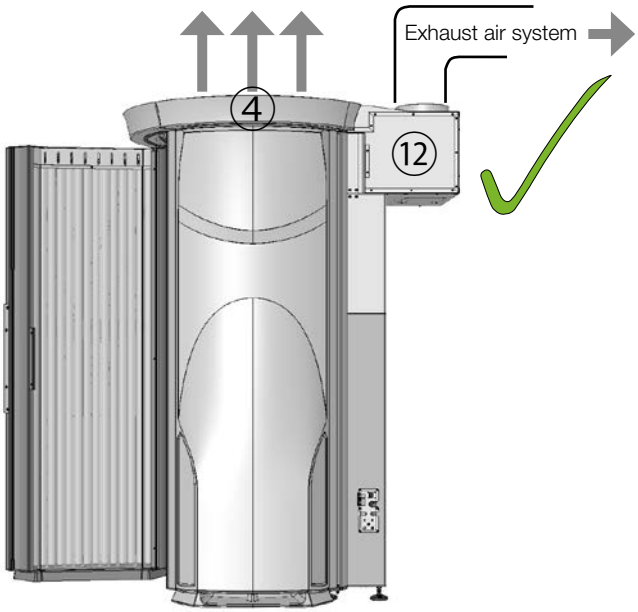

⑫	Central exhaust air module (optional)

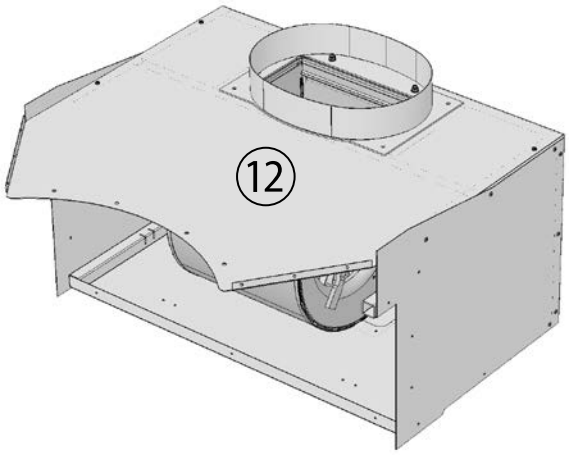

5. Connections

5.1 Class I ME equipment

WARNING

Risk of electric shock
To avoid the risk of electric shock, this equipment must only be connected to a supply mains with protective earth.

5.2 Overview supply connections

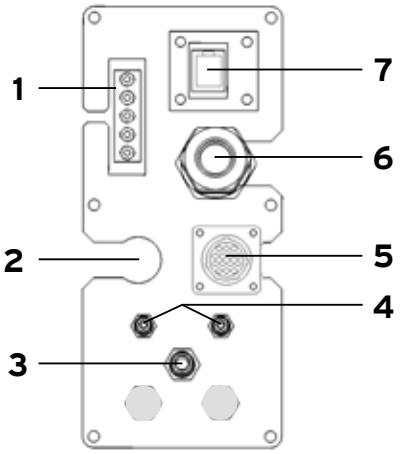

1	Mains voltage aquaCool box
2	Audio connection / channel selection
3	aquaCool - air (blue)
4	aquaCool - liquid
5	Connection of external timer (coin-box system)
6	Power supply
7	Data cable Tower/aquaCool box

5.3 Connecting the mains voltage

DANGER

Live parts
Risk of death or fatal injury due to electric shock when touching live parts.

- Switch neutral
- Secure against reconnection
- Check for neutrality
- Ground and short-circuit
- Cover or shield any adjacent live parts or components

Both the power supply and the related connection work must comply with national standards and local regulations. The connection work and replacement of the power supply cord must only be performed by qualified, trained and authorized service technicians. The connection to the 3 x 220 V mains must be protected by maximum over current protection. For Canada a Class-A ground fault circuit interrupter (GFCI) has to be used. Further information can be found in chapter “Technical data”.

CONNECTION REQUIREMENTS

The electrical installation must be equipped with a freely accessible all-pole disconnecting device in accordance with the overvoltage category III. (Master switch with clearly marked on/off settings e.g. “O” and “I” or additional indicator light). The master switch shall be fitted externally on the side of the tanning booth, so the operator can access it at any time, even when the tanning device is in operation. This means that for full separation each pole must have a contact gap according to the conditions of the overvoltage category III. The device shall be capable of being locked in the off-position and shall comply with IEC 60447. A supply main switch must not be

incorporated in the power supply cord.

A Class-A ground fault circuit interrupter (GFCI) has to be used for Canada. Should the operation of the tanning device cause any interference in the power supply network, e.g. with ripple-control systems (TRA), consult your power supply company to have corresponding blocking elements (audio frequency suppressors) installed.

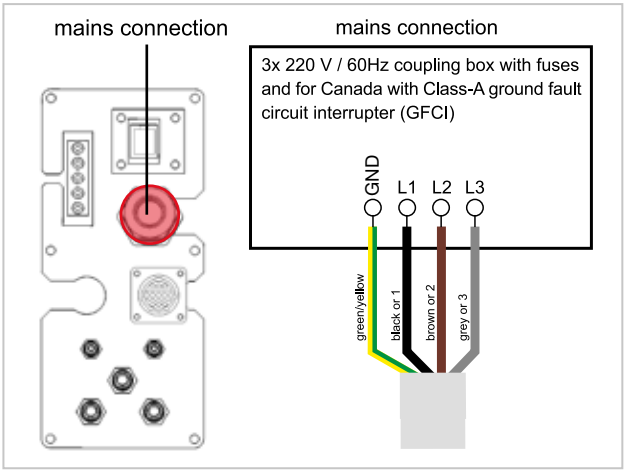

The tanning device is by default set up to operate on 3 phases but it can be changed over to 2-phase operation. The wiring for 3-phase operation is shown below:

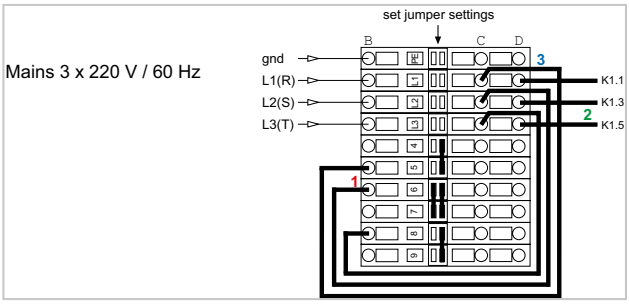

The wiring for 2-phase operation is shown below.

- Re-wire the 3 cables according to the diagram.
- Make sure that you use the right cable for the power supply.

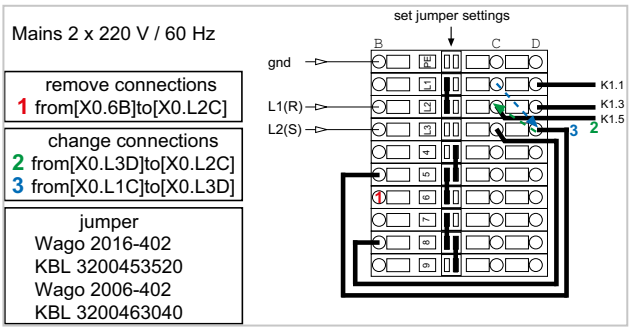

5.4 Connecting an external audio source

The cinch marked in the illustration is connected to the external audio source where the line-out of the sound player or the headphone/loudspeaker jack are available for connection.

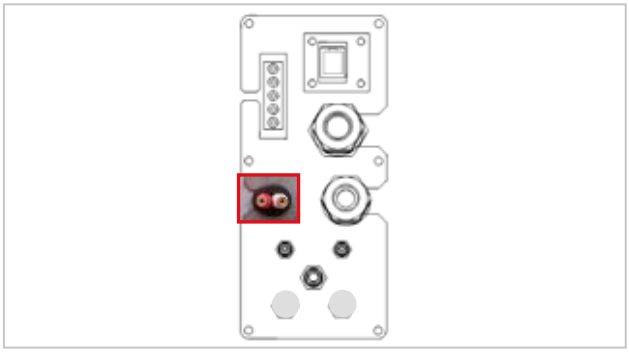

5.5 Level adjustment studio music signal

The voice / audio system components are installed in the back part of the tanning device. The potentiometer which serves to adjust the external audio signal level is accessible through a maintenance hatch on the left hand side of the tanning device. To avoid overdrive, select the level adjustment accordingly. The level setting depends on the strength of the external signal and should be carried out by qualified, trained and authorized service technicians.

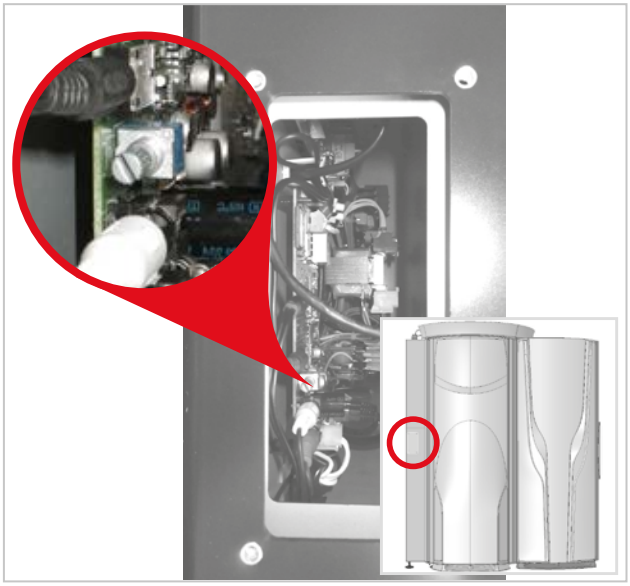

5.6 Operation using different audio sources

The audio source can be changed via the control panel.

The tanning device can be operated using the following audio sources:

INTERNAL MP3 PLAYER

When using the internal MP3 player, you can either play the music tracks that are originally supplied on the SD card, or you can record your own tracks to the SD card.

EXTERNAL AUDIO SOURCES

As an external audio source, you can connect devices ranging from the standard-line level to low loudspeaker levels.

These sources comprise:

- Studio music
- External Bluetooth players

EXTERNAL 100 V AUDIO SIGNAL ON STUDIO CHANNEL (OPTIONAL FEATURE)

If you decide for a connection to a 100 V audio system, you will need a transformer (KBL no.: 9100 0170 00) for the transmission of the audio signal.

This connection must be made by qualified, trained and authorized service technicians.

5.7 Bluetooth connection

To connect an external player (smartphone etc.) wirelessly to the tanning device, an optional Bluetooth interface is available.

CONNECT EXTERNAL PLAYER

A Bluetooth connection can be established in standby and during tanning mode.

	Make sure that you are within the reception area (about 2 meters). Make sure that your player is configured to search for other Bluetooth devices. Should this not be the case, enable Bluetooth manually. To do so, please read the instructions for your player.

- Depending on your settings the search will be performed automatically or manually. All available Bluetooth devices within reach will be listed after a short time.
- Among the available tanning devices choose “KBL Sound”. In the service menu, a trailing number (01, 02, 03, ...) can be added to tanning device name.
- If necessary confirm the shown code and connect again. Not every smart phone asks for a code.

Example - Samsung Galaxy

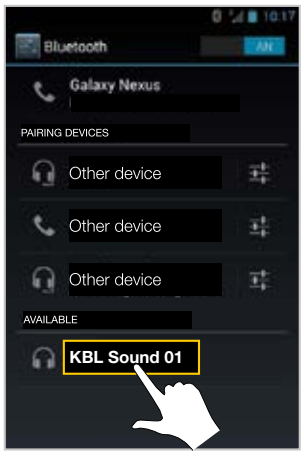

Example - Apple iPhone



- A two-time beep indicates that your player is connected to the tanning device.

Example - Samsung Galaxy

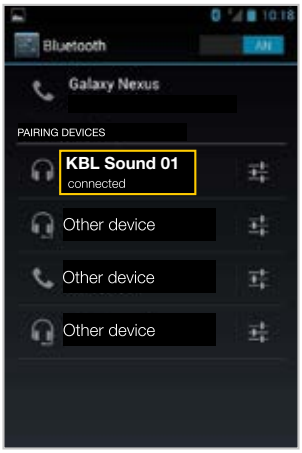

Example - Apple iPhone



- Set your player to a **medium volume level** and start the music.
- Adjust the volume level on your player.
- During the tanning session, the volume control has to be done at the tanning device.

DISCONNECT EXTERNAL PLAYER

An existing connection is disconnected automatically after tanning.

The connection is automatically disconnected if the tanning session is not started within 6 minutes.

COMPATIBILITY OF BLUETOOTH DEVICES

KBL attaches great importance to hardware compatibility. Due to the large number of manufacturers, KBL can not guarantee a 100 % compatibility. In rare cases, it may happen that a Bluetooth connection can not be established.

CORRECTIVE ACTION

Each Bluetooth device offers a list of paired devices. Delete the older entries in this list which have a profile that overlaps with the ones for which you want to pair your player.

Start the Bluetooth device detection again.

5.8 Connecting the channel selection

The following diagrams show the wiring of the channel selection on the audio equipment's side, for pulse coding as well as for BCD coding.

Wiring on the audio system of the studio

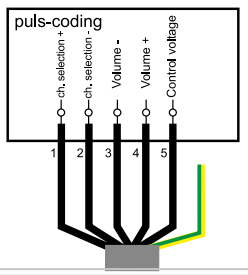

Wiring on the audio system of the studio

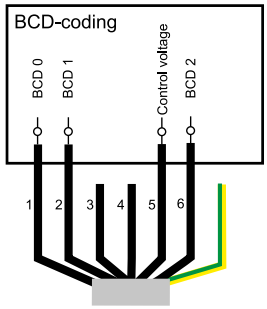

CHANNEL	BCD 0	BCD 1	BCD 2
1	0	0	0
2	1	0	0
3	0	1	0
4	1	1	0
5	0	0	1
6	1	0	1
7	0	1	1
8	1	1	1

5.9 Connecting the external timer

CONNECTING VIA AMP PLUG (DEFAULT)

Connect the external timer (e.g. coin box, studio control) according to the instructions supplied with the timer. The connection is made via the socket for an AMP plug on the back side of the device. The following diagram shows the wiring of the timer connection.

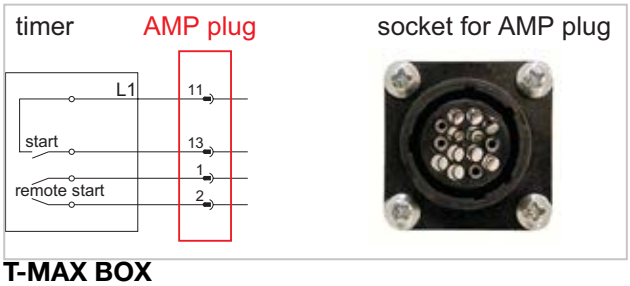

T-MAX BOX

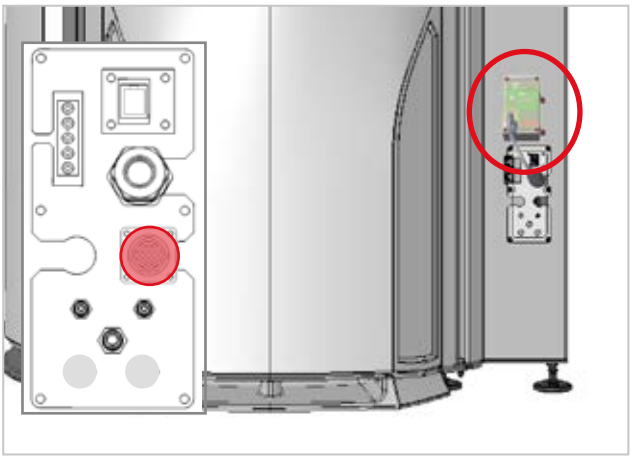

T-MAX CONNECTOR PANEL

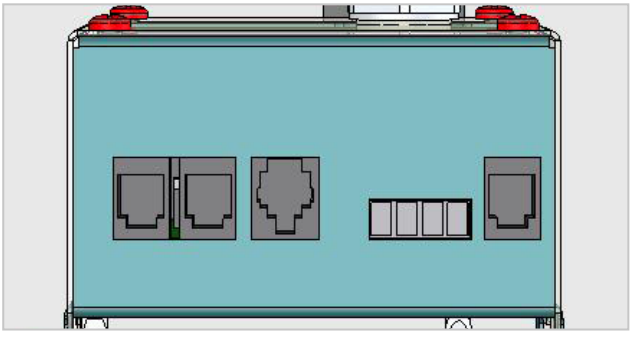

- The exposure times stated in the exposure schedule must be entered at the external timer.
- Information on how to enter the exposure time can be found in the operating instructions of your external timer.

5.10 aquaCool box connections

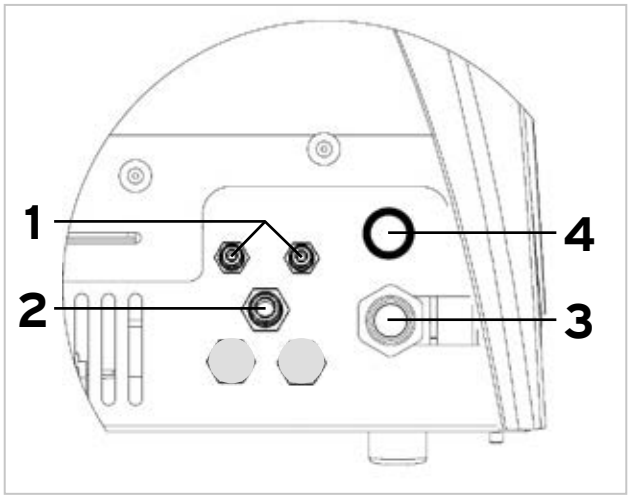

1	aquaCool - liquid
2	aquaCool - air (blue)
3	Mains voltage aquaCool box
4	Data cable Tower/aquaCool box

5.11 Connections aquaCool box /tower

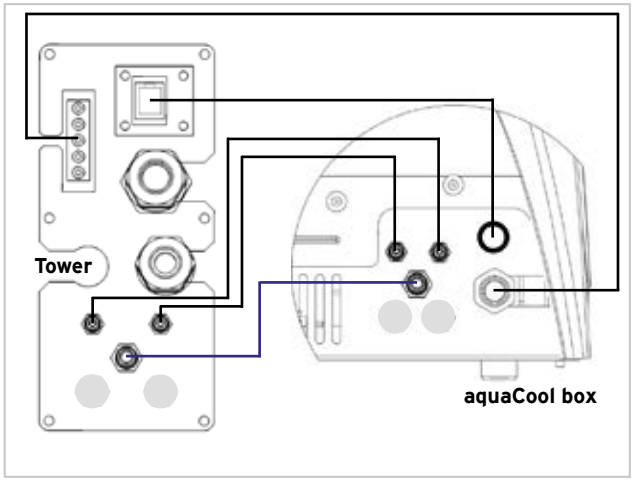

6. Start-up

Before switching on for the first time:

- Fix the supplied warning sign or one with the following wording permanently to the wall close to the tanning device:

Warning

UV-radiation can cause eye and skin damage as well as skin aging and possibly skin cancer. Ask the staff for further information.

Wear protective goggles.

Certain medicines or cosmetics can increase the sensitivity of the skin to UV radiation. If in doubt, consult a physician.

- Determine the presettings for the tanning device in the service menu.
- Check correct installation of fluorescent tubes. The tube labeling must be visible, otherwise no tanning effect may be obtained.
- Store these Operating Instructions in a place that allows for easy access at any time.

6.1 Operating modes

STANDBY MODE

The tanning device is in an idle state, i.e. it is connected to the mains but is currently not being used. The tubes and the tanning lamps are switched off. From the standby mode, you can change over to the tanning mode or to the service mode.

TANNING MODE

The tubes and the tanning lamps are switched on and a tanning session is in progress. While the tanning device is in tanning mode, the settings for the ongoing tanning session can be changed via the interior control panel.

SERVICE MODE

In the service mode, the tanning device is configured for the tanning mode. Various values can be displayed and test functions can be carried out.

FAN RUN-ON

After the tanning session, the fan runs on for 3 minutes in order to cool down the device. The fan power is automatically decreased as the tubes cool down.

7. Tanning instructions

Tanning normally begins after one to two exposures and maximizes after one to four (1-4) weeks of exposure following the recommended schedule for your skin type.

7.1 Instructions for the user

Observe the following tanning instructions.

GENERAL

- Only individuals described in chapter *Intended use* and not listed in chapter *contraindications* may use the tanning device.
- The different skin types tolerate the sun and hence tanning times to a different degree. Please observe the specifications in the skin-type table (supplied with the tanning device) and the tanning times. After having reached the ultimate tan, further tanning can only be achieved by substantially exceeding the allowed tanning times. This must absolutely be avoided.
- It cannot generally be assumed that the use of a tanning device reduces the risk of getting a sunburn.

DANGER OF ULTRAVIOLET RADIATION

- The UV radiation of the sun or of UV appliances can cause damage to the skin or to the eyes. These biological effects depend on the type and amount of radiation as well as on the individual sensitivity of the skin.
- After excessive exposure to radiation, the skin may exhibit sunburn. Excessively repeated exposure to UV radiation of sunlight or UV appliances can result in premature ageing of the skin and in a higher risk of skin cancer.
- Do not expose yourself to UV radiation if you take medicine that increase the sensitivity to ultraviolet radiation, e.g. antibiotics, sulfonamides, psychiatric drugs, tranquillizers, antidiabetes treatments and diuretics and/or sun creams which contain psorale or coumarin may increase skin sensitivity. When in doubt, seek medical advice.
- Seek medical advice if persistent swellings or skin sores develop or pigmented moles change in appearance.
- As with natural sunlight, overexposure may cause eye injury and sunburn;
- A person with a history of skin problems should consult a physician before using the tanning device;
- Overexposure must be avoided;
- Children, elderly, or fair skinned people who always burn easily and either never tan or barely tan shall not use this tanning device.
- Remove cosmetics before tanning and do not use any sunscreen or products that accelerate tanning. For tanning, the skin should have been thoroughly cleaned and dry.

DANGER OF LONG-TERM CONSEQUENCES

Exposure to ultraviolet radiation may increase the likelihood of developing skin cancer and cause serious eye injury.

You do not need to become tan to make Vitamin D.

- Overexposure is to be avoided.
- The elderly people should not use this tanning device.
- Children shall not use this tanning device.
- While there is no immediate clinical evidence of UVA exposure and its effects upon pregnant woman, it is strongly advised that pregnant woman be discouraged from using the tanning device.

If in doubt seek for medical advice!

FOR EACH TANNING SESSION

- Remove cosmetics before the session and do not use any sunscreen.
- Allow for at least 24 hours to pass between sessions.
- After a tanning session in a studio, do not take another sunbath out of doors on the same day.
- Always wear the supplied protective goggles.



WARNING

Excessive dose of UV radiation

The unprotected eye can suffer from surface inflammation and in certain cases, e.g. after a cataract operation, excessive radiation can damage the retina. After many repeated sessions a cataract might form.

- Inform users to use the supplied protective goggles that block UV rays.

Failure to use protective eyewear may result in severe burns or other eye injury. If discomfort develops discontinue use and consult a physician!

7.2 Exposure schedule

For the precise definition of the skin types, please refer to the supplied skin-type table.

If the tanning-session sequence is interrupted for 4 weeks or more, you will have to start with the first session again.

The times mentioned in the exposure schedules are only valid for tubes and facial tanners that are replaced according to the maintenance intervals.

This exposure schedule is valid for the following tanning device:

- KBL TOWER PUREENERGY 5.0
- KBL TOWER PUREENERGY 5.0 HYBRIDSUN

		Week 1 1st - 3rd Sessions	Week 2 4th - 6th Sessions	Week 3 7th - 10th Sessions	Week 4 11th - 15th Sessions	Subsequent Sessions
SKIN TYPE	I	NOT ADVISED				
	II	2	3	4	7	10
	III	2	3	5	8	10
	IV	2	4	6	9	10
	V	2	4	6	10	10
Maximum exposure is 10 minutes!						

- The exposure times stated in this exposure schedule must be entered at the external timer.
- Information on how to enter the exposure time can be found in the operating instructions of your external timer.

* For tube set, see table “Technical data”.

8. Tanning mode

WARNING

Excessive dose of UV radiation

Excessively prolonged tanning sessions may cause severe damage to skin and eyes.

- Never operate the tanning device with a defective timer.
- Observe the tanning times given in the exposure schedule.

The following explanations and functions refer to a tanning device that is fully equipped with all features.

8.1 Starting the tanning session

During the tanning session, the door must remain closed in order to ensure that the ventilation works properly.

- Close the door and place yourself in the middle of the tanning device booth, with body positioned an equal distance form the surrounding lamps.
- Put on protective goggles.
- The tanning session automatically starts after the external timer controlled delay time has expired. During the preset delay time the tanning session can be started anytime manually using the START button at the tanning device.

8.2 Operation during the tanning session

You can control the functions of the tanning device via the interior control panel during the tanning session. It is particularly easy for you to access the basic functions. Buttons with recesses that can easily be sensed allow for easy operation of the system even with your eyes closed.

NOTES:

20 seconds after your last input, the interior control panel changes over to the indication of the tanning time. An information line at the bottom edge of the interior control panel shows the current music track.

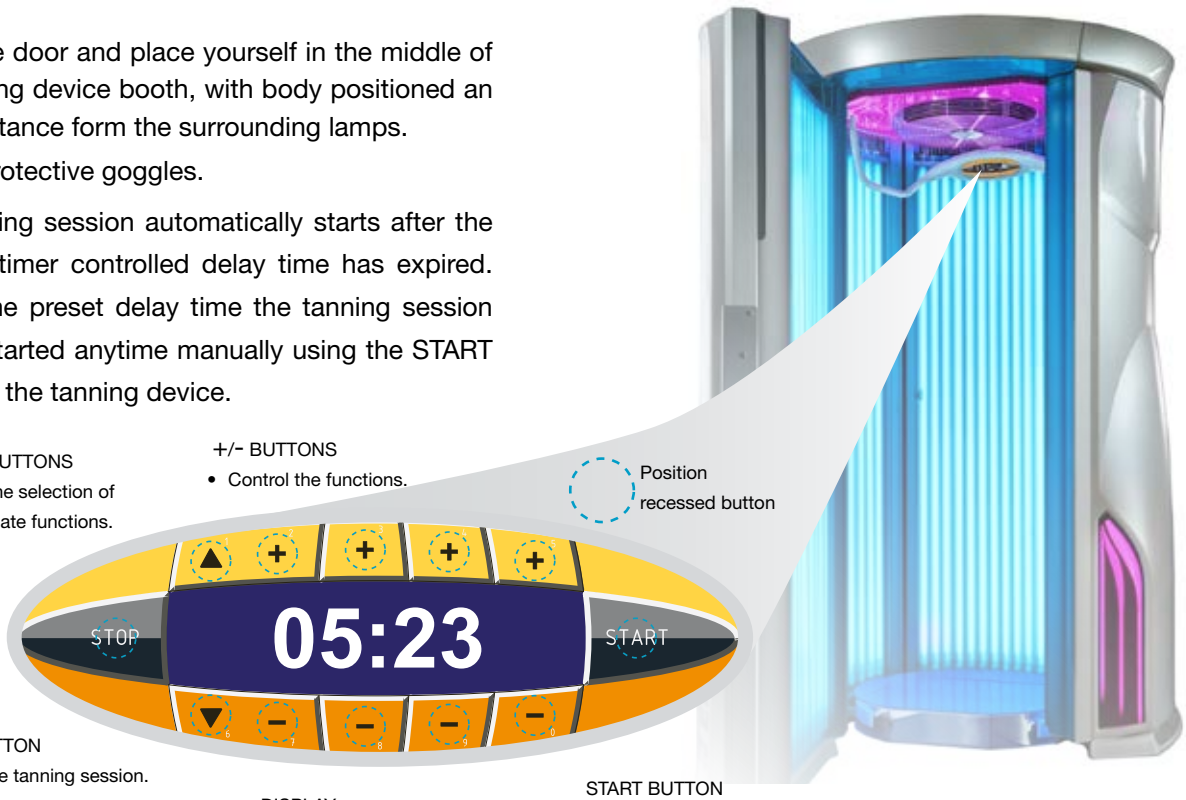

During the tanning session, you need quick access to basic functions such as volume control, body fan and aquaCool.
You should also be in a position to change the subordinate functions.
The interior control panel caters for both requirements. You have

- direct access to frequently needed functions via the “Basic functions” section, and
- access to the subordinate functions you made via the variable section of the interior control panel (display according to the rotation principle).

BASIC FUNCTIONS

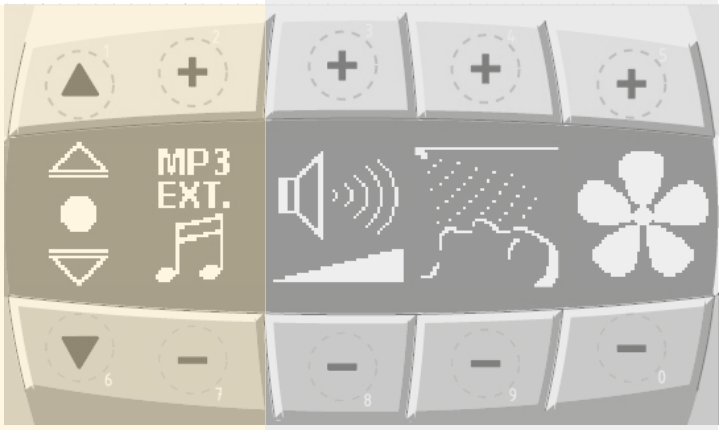

The basic functions portrayed here refer to a fully equipped tanning device. If you have chosen a simpler equipment package, functions from the variable operating elements automatically take the place of the missing basic function.

VARIABLE SECTION OF THE INTERIOR CONTROL PANEL

During the tanning session, you continue to have access to the subordinate functions. If you wish to make any changes, you can do so in the variable section of the interior control panel. By pressing one of the arrow buttons ▲ ▼, above or below the changeover symbol, all available functions will be displayed one after the other according to the rotation principle. You can switch these individual functions on or off and, if possible, make changes to the settings.

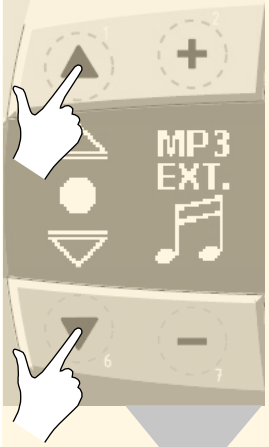

Prerequisite:
The functions must be available and activated in the service menu.

Selectable function symbols (for a fully equipped tanning device)

megaVoice | MP3-int. | Studio | MP3-ext.

8.3 Basic functions

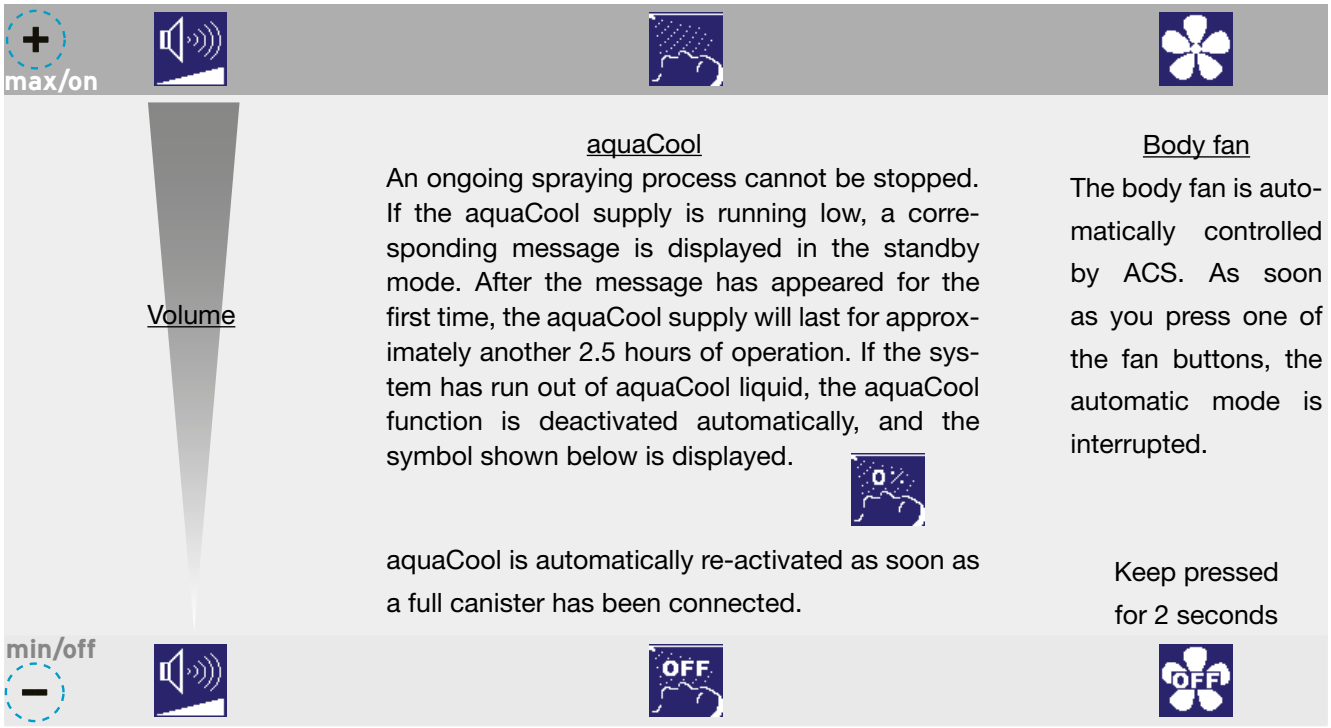

aquaCool

An ongoing spraying process cannot be stopped. If the aquaCool supply is running low, a corresponding message is displayed in the standby mode. After the message has appeared for the first time, the aquaCool supply will last for approximately another 2.5 hours of operation. If the system has run out of aquaCool liquid, the aquaCool function is deactivated automatically, and the symbol shown below is displayed.

aquaCool is automatically re-activated as soon as a full canister has been connected.

Body fan

The body fan is automatically controlled by ACS. As soon as you press one of the fan buttons, the automatic mode is interrupted.

Keep pressed for 2 seconds

8.4 Variable section of the interior control panel

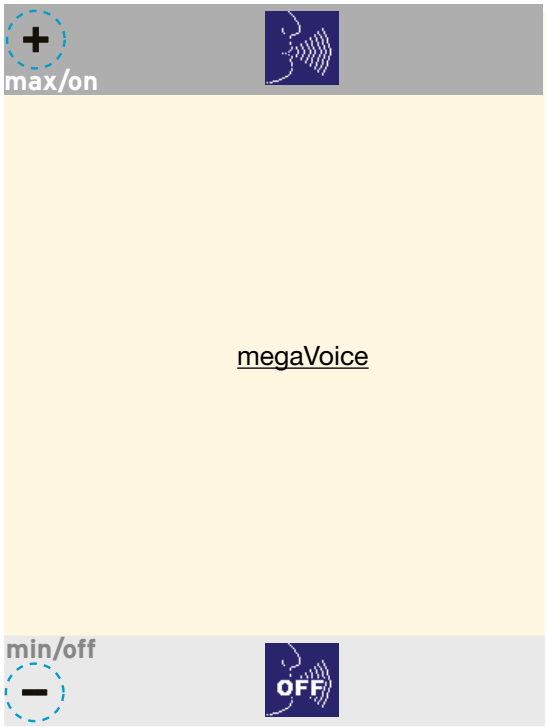

aquaCool
manual control

Alternative to automatic operation aquaCool can also be started manually.

Service menu settings:

- With activated aquaCool the point *Aqua/ cycle time* must be set to “manual”.

By pressing the aquaCool plus button, a spray cycle can be triggered.

AUDIO FUNCTIONS

There is a maximum of three audio sources available at the user's disposal. If you change over to another source, you must activate it first. The activation is effected by pressing the + or the − button. All inactive audio functions are marked with "OFF" on the interior control panel so that you can easily recognize the active audio source.

MODEL: ACTIVATING AUDIO FUNCTIONS

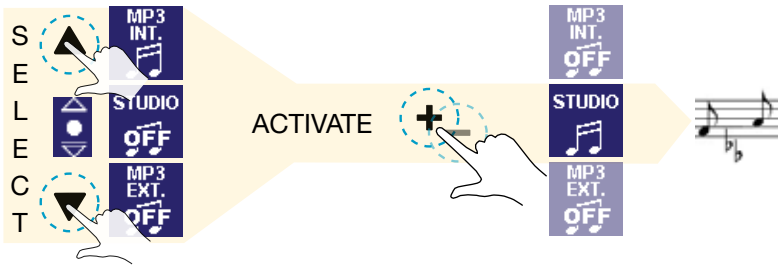

Variable section of the interior control panel (audio functions)

Channel +

Studio



This function is used to play the studio music.
If the Studio function has been activated, you can press the plus and minus buttons to browse through the channels, provided that more than one channel is available.

MP3 external



You can use the "MP3 external" control element to access a smartphone via Bluetooth.
If "MP3 external" active, you can switch between the individual tracks using the plus and minus buttons.
The tracks can also be selected using the corresponding controls on the smartphone.

Channel −

Tracks +

MP3 internal



This function is used to play the tracks of the internal MP3 player of the tanning device.
If the MP3 internal function has been activated, press the plus and minus buttons to browse through the individual tracks.

Tracks −

9. Standby mode

Use standby mode to

- access service mode.
- run standby functions.
  - turn on/off audio (music).
  - turn on/off the decorative lighting of the tanning device.
  - test aquaCool system (1 spraying cycle).

9.1 Service mode

	For service mode information, refer to the **ASSEMBLY INSTRUCTIONS & MENU SETTINGS** guide.

9.2 Standby functions

LAYOUT OF THE INTERIOR CONTROL PANEL NUMBERS

The buttons of the interior control panel are allocated double functions. In addition to the standard operating elements, they stand for numbers that, in standby mode, provide access to standby and service functions. Simply enter the corresponding sequence of numbers on the interior control panel.

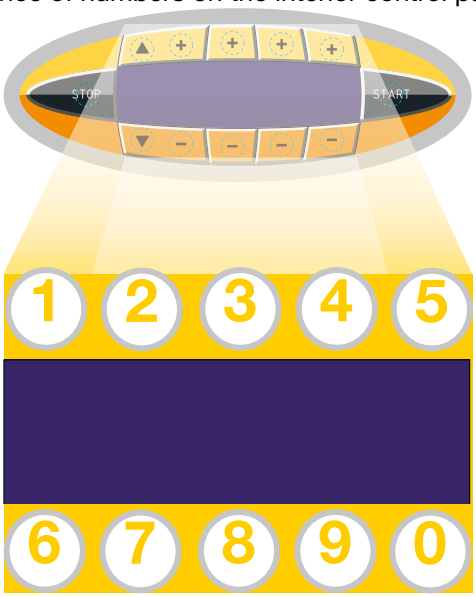

SWITCHING THE DECORATIVE LIGHTING ON AND OFF



NOTE

The connection times of the decorative lighting can be set in the service menu individually for each day of the week.

There are two independent connection periods (A and B) available for each day of the week.

MUSIC ON / OFF



AQUACOOL SPRAYING TEST



NOTE

Enter numbers in swift order!

9.3 Set decorative lighting

For remote control of the color mode, you may use our colorMotion controller. Available only for tanning devices with LED technology.





To control the color mode of the tanning device, use the stylish colorMotion controller with its elegant colorWheel and its full touch panel. Change brightness, turn on and off the lighting, select static colors or select one of the automatic color change programs. This wireless control technology allows remote control from various directions with just a finger touch.

LOW POWER CONSUMPTION AND AWAKENING

After 20 sec. without touching, the controller will automatically enter the low power sleep mode. Touch any key to wake up the controller to normal use.

MATCH CODE FUNCTION

In order to control several tanning devices with one RF-controller, press down the match code button on the LED controller and the “I” button at the RF-controller at the same time, wait for the LED lamp flashing several times, then move away from the two buttons. To cancel match, press down the match code button on the LED controller and the “O” button at the RF-controller at the same time, wait for the LED lamp flashing several times, then move away from the two buttons.

The LED controller is located in the rear wall of the tanning device.

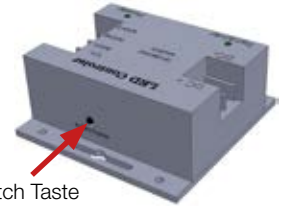

COLORMOTION CONTROLLER

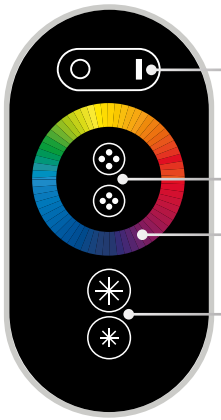

colorMotion controller - control elements

	**On / Off** Decorative lighting. The selected setting automatically will be saved when the system is switched off.
	**Program selection switch**

Program	Mode	Note
1	RED	Intensity adjustable
2	GREEN	
3	BLUE	
4	YELLOW	
5	PURPLE	
6	CYAN	
7	WHITE	
8	3 color - jump	Frequency adjustable (Repetition rate)
9	7 color - jump	
10	3 color - gradient	
11	3 color - smooth	
12	7 color - gradient	
13	7 color - smooth	
14	3 color - flicker	
15	7 color - flicker	
16	3 color - flash	
17	7 color - flash	
18	Auto play	

	**colorWheel** By touching the colorWheel the selected color switches on and additionally the program selection will be reset. At the next program selection, the program 1 (RED) will start.
	Increases / decreases the intensity of the static colors (Program 1-7). Increases / decreases the repetition rate (Program 8-18).

10. Maintenance and cleaning

Regular maintenance as shown in chapter Maintenance intervals is required for the safe operation of the tanning device and must be documented.

- The current operating hours of the tanning device and its parts requiring maintenance, may be displayed in the service menu. Please refer to chapter “Service menu” in the assembly instructions.
- Cleaning and disinfection operations are carried out in accordance with the cleaning and disinfection plan.
- Maintenance work may only be carried out by qualified, trained and authorized service technicians.
- Do not reach behind covers and do not open the tanning device with the device switched on.



- Use OEM spare parts of the same type only! The use of other parts will void the manufacturer’s warranty!
- In case of damage or injury proven to be the result of the use of non-genuine spare parts any liability is excluded.
- Replace UV-lamps only with the ones that are characterized on the tanning device. The use of other UV lamps will void the operating license!
- Only use original KBL ballasts for CPI-Energy tanning devices.



⚠ WARNING

Injuries and damage caused by improper or insufficient maintenance

Maintenance and care play a major role for the tanning devices performance and appearance over its useful life. Diligent compliance at the specified intervals is absolutely necessary to ensure the proper operation of your tanning device. Improper maintenance can cause the tanning device to be damaged or to become unusable. Always comply with the specified maintenance intervals. Refer to the following informations given in this chapter.

- Please note that the tanning device must be inspected regularly by an authorized KBL representative every 12 months from the date of the last inspection to maintain its proper condition.
- If the tanning device is in use for longer than 10 years, it must be completely overhauled by qualified, trained and authorized service technicians.
- If the tanning device has not been used for a longer period of time, then it must first be inspected by qualified, trained and authorized service technicians before being put back into operation.

MAINTENANCE DOCUMENTATION

- Establish an accurate record-keeping system for the maintenance reports.
- Ensure that all maintenance periods have been fully complied with and documented as described in chapter „Maintenance intervals“ in the operating instructions.

DISCONNECT MAINS VOLTAGE



DANGER

Live parts

Risk of death or fatal injury due to electric shock when touching live parts.

- Switch neutral
- Secure against reconnection
- Check for neutrality
- Ground and short-circuit
- Cover or shield any adjacent live parts or components

- Before carrying out any maintenance work, the tanning device must be disconnected from the mains voltage. That means that all live cables must be switched off. Switching off the tanning device alone is insufficient, as certain points may remain energized. Therefore, switch off fuses before performing any work and – if possible – remove them.

Additional protective measures

Accidental reactivation may result in serious accidents. After deenergizing, immediately secure all switches and fuses used for deenergizing against being switched on again.

- Unscrew circuit breakers.

Where circuit breakers cannot be unscrewed, a strip of adhesive tape can be applied over the actuation lever with the wording:

DANGER - DO NOT SWITCH

A sign with the text:

WORK IN PROGRESS

Place: .....

Sign may only be removed by: .....

must always and immediately be securely mounted.

- It is essential that you, the owner, and / or the studio operator check all components for signs of wear that can occur during normal use.
- After completing the work, refit all safety devices (e.g. switches).

10.1 Instructions on cleaning, disinfection and care

GENERAL INSTRUCTIONS

Before starting to clean the tanning device, take off any rings, bracelets, watches, etc. that you might be wearing, in order to avoid scratching the surfaces of the tanning device.

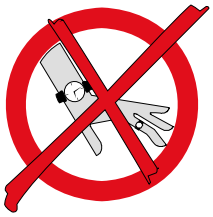



- Do not use concentrated disinfectant, solvent or alcoholic liquids.
- Cleaning fluid and/or disinfectant must not run into the tanning device.

APPLICATION

These symbols have the following meaning.

Apply the cleaning agent on the chamois or cloth and not directly on the surface.



CLEANING AND DISINFECTION

WARNING

Risk of Infection.

Risk of Infection by transferring through skin contact.

- **After each tanning session the tanning device must be cleaned and disinfected with a cleaning and disinfectant agent.**
- Use only EPA registered quaternary ammonium germicidal based detergent solution (follow product label for use-dilution), such as Lucasol One Step, to clean and disinfect the tanning device and its components.
- For thorough cleaning and disinfection, the product must be allowed to remain in contact with the surface being cleaned and disinfected for a specified amount of time. This specified amount of time depends on the cleaner/disinfectant which is used. Follow the directions for use of the cleaner/disinfectant. After this specified application time remove remaining cleaner/disinfectant from the surfaces of the tanning device. Use a single-pass paper towel.
- If the device is determined not to be visually clean at the end of the cleaning step, the relevant previous cleaning steps must be repeated so that a visibly soiled device is not used again. Removal of residual soil ensures the effectiveness of the disinfection process and reduces the risk of infection to users of the device.

ADDITIONAL CLEANING ACTIVITIES

WARNING

These cleaning works must be carried out by qualified, trained and authorized service technicians.

Every 6 months

Make sure that the inside and outside of the tanning device is cleaned and free from dust, fluff or objects.

Inadequate cleaning leads to overheating. As a result, this can lead to damage the tanning device!

Signs of electrical overstress

Check the cables and connections on signs of electrical overstress.

- **Discoloration**
- **Deformations**
- **Melting**
- **Blisters on the housing**

The affected components shall be replaced immediately! Use only OEM spare parts.

Check that all connectors are plugged into the socket housing to the end stop.

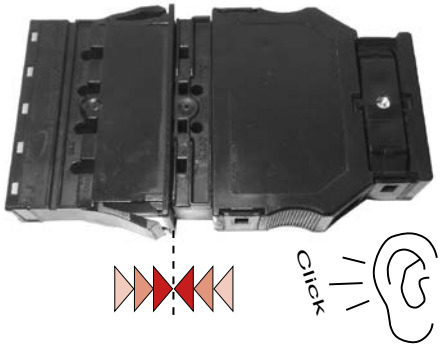

CLEANING AND DISINFECTION PLAN

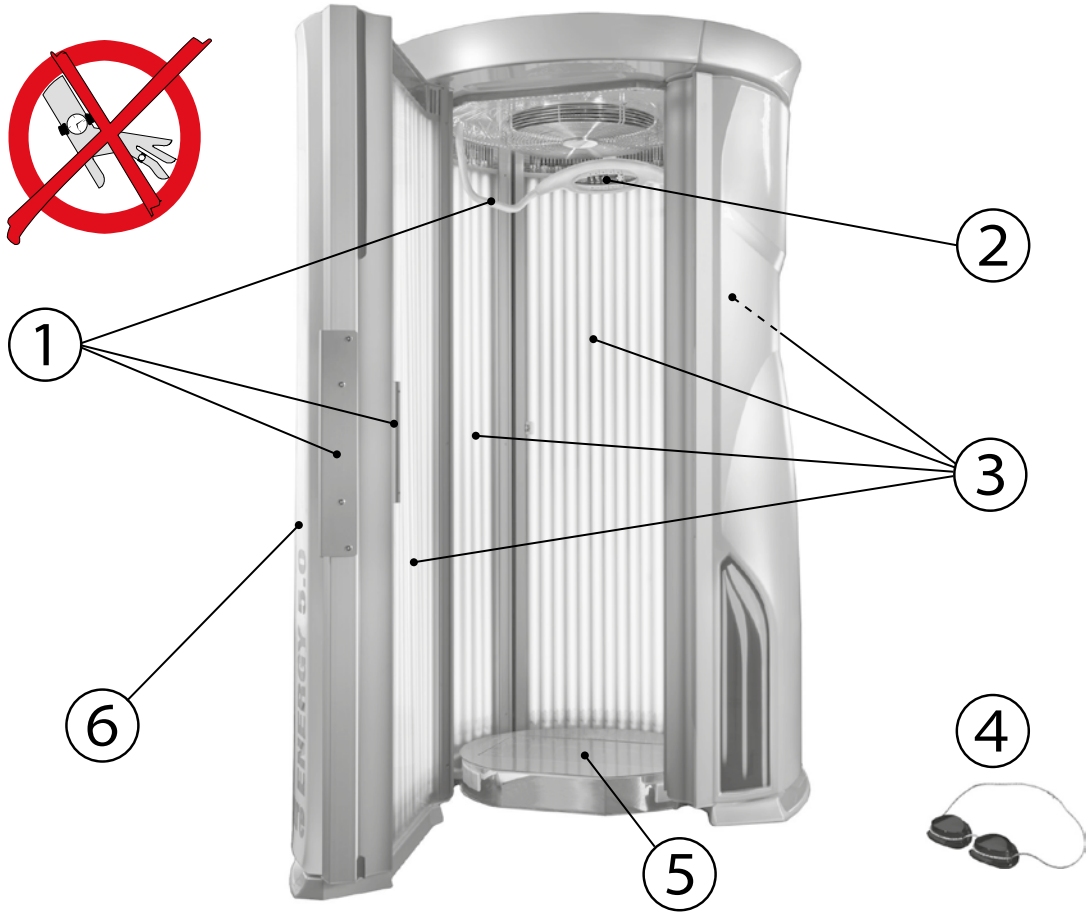

	Part	Application	Cleaning and disinfection activities	Interval
1	**Handles**	Directly on the surface	Clean these parts with single-pass paper towels. Use only EPA registered quaternary ammonium germicidal based detergent solution (follow product label for use-dilution), such as Lucasol One Step, to clean and disinfect the tanning device and its components. For thorough cleaning and disinfection, the product must be allowed to remain in contact with the surface being cleaned and disinfected for a specified amount of time. This specified amount of time depends on the cleaner/ disinfectant which is used. Follow the directions for use of the cleaner/disinfectant. After this specified application time remove remaining cleaner/disinfectant from the surfaces of the tanning device.	After each tanning session
2	**Control panel**			
3	**Acrylic panes**	Directly on the surface		
4	**Protective goggle**			
5	**Floor plate**	Directly on the surface		
6	**Plastic surface of the door**	-	Clean with a damp chamois and a cleaning agent for acrylic plastic (antistatic). Prevent the corners and edges from getting wet. Never clean with a dry cloth.	When required
	Tubes		Remove tubes and clean them with a damp chamois.	200 operating hours
	Other plastic surfaces and varnished surfaces	-	Clean with a damp soapy cloth. Never clean with a dry cloth.	When required

10.2 Maintenance intervals

MAINTENANCE PLAN

Component	500 h / 6 months	2000 h / 1 Year	5000 h / 5 Years	10000 h / 10 Years	Activity
Acrylic panes	X				Inspect and replace as necessary
		X			Replace
Sleeve of the door cable entry		X			Inspect and replace as necessary
Chassis and associated fasteners		X			Inspect and replace as necessary
				X	Replace
Wiring and associated plugs / terminal connections		X			Inspect and replace as necessary
				X	Replace
Starter decorative lighting		X			Replace
Contactors		X			Inspect and replace as necessary
				X	Replace

Component	After approx. 250 operating hours	After approx. 800 operating hours	After approx. 1000 operating hours	Activity
Tubes		X		Replace
aquaCool nozzles	X			Inspect and replace as necessary
			X	Replace

Additional or recurring inspections	
Every 6 months cleaning service	Make sure that the inside and outside of the tanning device is cleaned and free from dust, fluff or objects. See 9.1 -> Operating Instructions, Inadequate cleaning leads to overheating. As a result, this can lead to damage of the tanning device.
Every 12 months inspection	Please note that the tanning device must be inspected regularly by a KBL authorized representative every 12 months (from date of installation) to maintain its proper condition!.
10 Years inspection	If the tanning device is in use for longer than 10 years / 10000h, it must be completely overhauled by qualified, trained and authorized service technicians.
On start up	If the tanning device has not been used for a longer period of time, then it must first be inspected by qualified, trained and authorized service technicians before being put back into operation.

10.3 Tools and aids

	Hexagon socket screwdriver Wrench sizes: 2,5 + 4mm
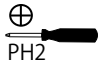	Standard Phillips screwdriver (PH2)
	Number of qualified, trained and authorized service technician required for this maintenance task.

The following chapters describe the work steps required for carrying out maintenance and care actions.
At the beginning of each chapter, the required tools and aids are depicted, unless the corresponding process can be carried out by one individual person without any further auxiliary equipment.

	The assembly is basically carried out in reverse order of the disassembly. Exceptions are specifically pointed out.

10.4 Acrylic panes

The acrylic panels used for the tanning devices are made of acrylic glass especially developed for this application, featuring a particularly high UV permeability and resistance, as well as an easy-care, hygienic surface that is gentle on the skin.

- The instructions for cleaning and care must be observed!
- The outer surface can be cleaned without any preparatory works.

	The panes are cleaned from the inside whenever necessary. When cleaning the inside, it is recommended to clean also the tubes.

REMOVING ACRYLIC PANES

	2,5 			

The illustration shows the disassembly at the door. Disassembling of sides and rear wall is carried out in same manner.

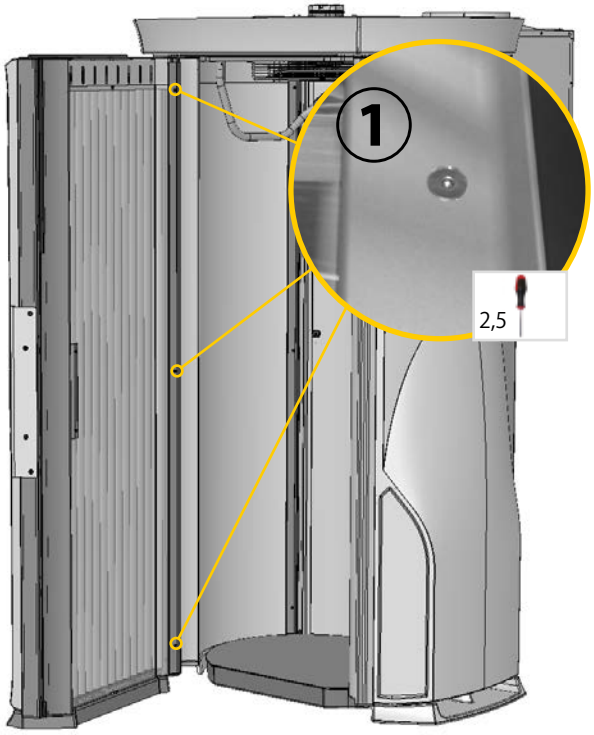

①	Remove the three hexagonal screws of the side covering strip.
⇒	Fold back the side covering strip. 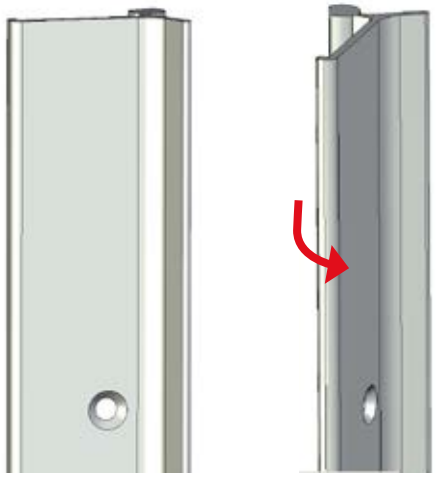

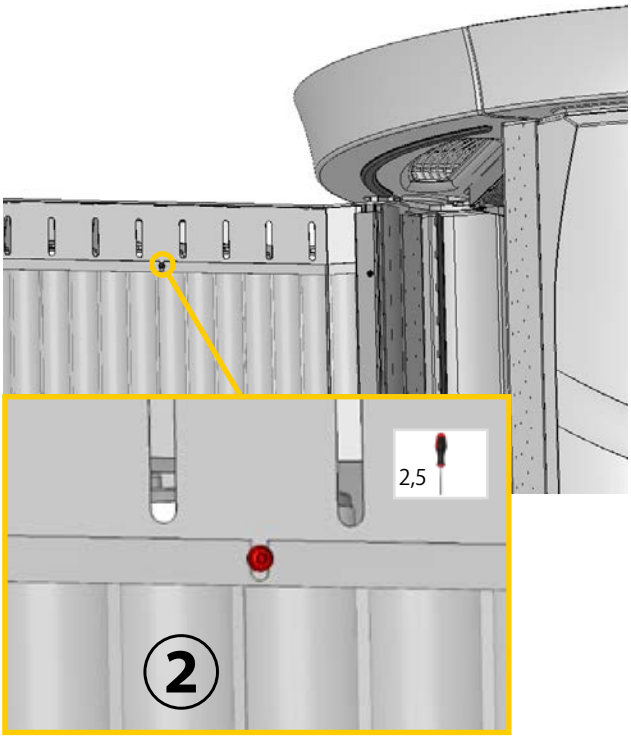

If your tanning device is equipped with a central air outlet module, also undo the screw ② that is located centrally at the top of the door pane.



⇒ Lift the panes out of the guide rails and keep them in a safe place.

INSTALLING ACRYLIC PANES

After the pane and the tubes (if necessary) have been cleaned, reinsert the pane into the guide rails and close the side covering strip.

10.5 Tubes

By regularly cleaning the tubes you can help preserve their tanning power.

- When installing the tubes, make sure that the tube inscription is visible. If it is installed in a different position, there will be no tanning effect.
- After new tubes have been installed, the operating hours of the tubes must be reset in the service menu.

WARNING

Injuries and damage due to improper maintenance

The share of harmful UVB radiation may increase when the maintenance intervals for the UV lamps are exceeded or incompatible UV lamps are installed. As a result sunburn and other skin damage may occur.

- Always comply with the specified maintenance intervals, see chapter maintenance intervals / maintenance plan.
- Follow the cleaning / disinfection instructions.

Improper maintenance can cause the tanning device to be damaged or to become unusable.

REMOVING TUBES

	2,5			

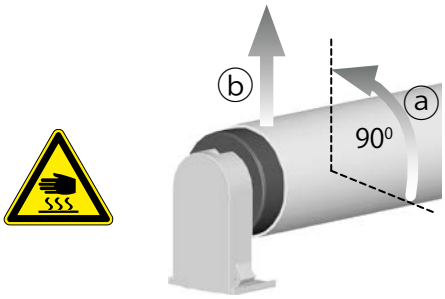

⇒	Removing acrylic panes.
⇒	Remove the tubes by turning each tube a quarter to the right or to the left and then pulling it out. Remove tubes from lower sockets first.

TUBE ARRANGEMENT

HYBRIDSUN DEVICES

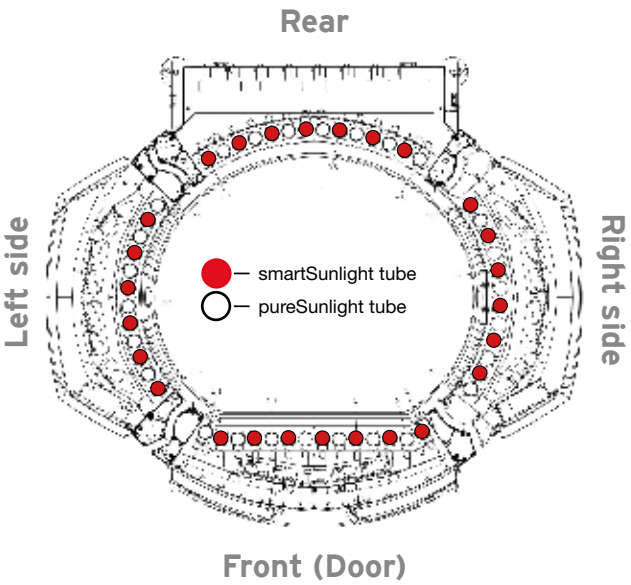

10.6 Interior unit lighting

The tanning device is lighted by high-performance-LED's. In the case of a defect, replacement can only be made by qualified, trained and authorized service technicians. Contact your service partner in this case.

10.7 Recording to an SD card

	PH2			

REMOVING THE SD CARD

The SD card slot which contains the storage medium with the MP3 data from the internal MP3 player is accessible through a maintenance hatch on the left hand side of the tanning device.

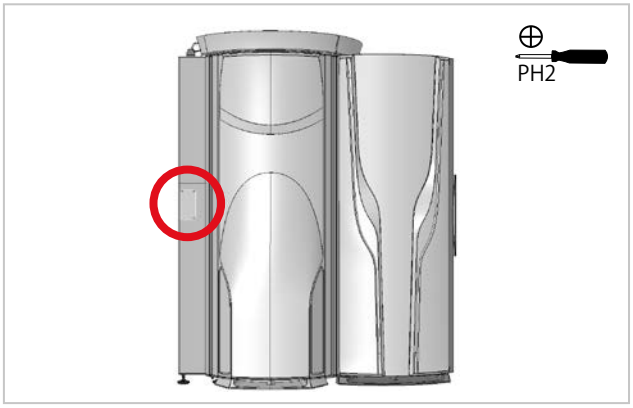

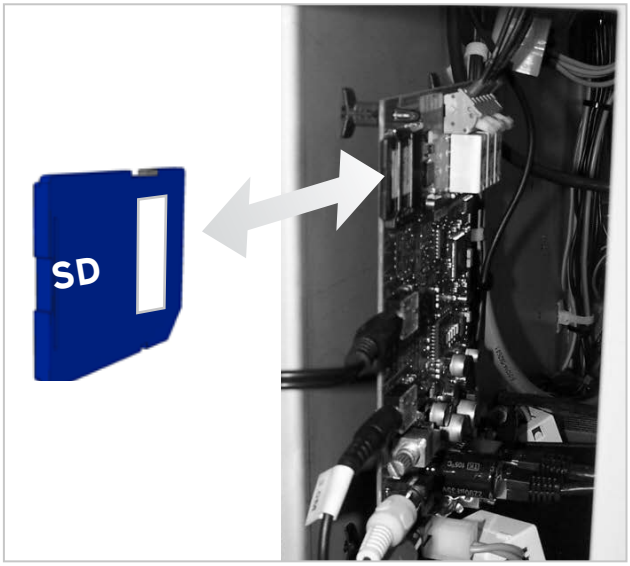

Please refer to the chapter “Technical data” for information regarding supported card sizes as well as file-system and MP3 formats. The SD card must not be formatted, the Voice folder and its contents must not be changed or deleted. Outside of this folder you can add or delete audio files as you desire. These audio tracks are played if the corresponding source has been selected. The number of files is limited by the storage capacity of the SD card.

RECORDING TO THE SD CARD

	Attention • Do not modify or delete the VOICE folder or the data it contains.

⇒	Insert the card into the computer and wait for it to be recognised.
⇒	Copy files to SD card, or delete files from it.

10.8 Replacing the aquaCool canister

	4			

	WARNING • **Risk of infections** • Function of nozzles impaired. Do not use any agents other than aquaCool and Aroma gel supplied by KBL.



- Unscrew the cover of the aqua cool box and remove it.
- If the fluid level drops to a minimum, corresponding messages are displayed at the internal control panel.
- If the canister is used up, another message appears and aquaCool switches off.

	Due to the system a residual amount remains in the canister.



- Unscrew the lid.
- Keep the hose end including the lid in a clean plastic bag while replacing the canister.
- Replace the canister.
- Start aquaCool initialization (service menu).



• Attach the cover.



• Screw the cover.

10.9 Replacing the aquaCool nozzles

After 1,000 hours of operation, the aquaCool nozzles must be replaced in order to ensure that the aquaCool system functions properly. The assembly instructions are included with your spare parts delivery.

11. System messages

ERROR MESSAGES			
After the error has been eliminated, all error messages must be acknowledged by pressing **START** on the interior control panel.			
No.	**Status message**	**Description**	**Remedy**
01	Excess temperature bimetal	Bimetal switch triggers.	Check the air-intake/air-discharge system. Let the device cool down.
02	Maximum tanning time!	Enabling signal from coin-box system comes in longer than the time value approved under “Maximum tanning time” (voltage remains connected)	Disconnect from the coin-box system.
03	Excess temperature exhaust fan!	Bimetal switch in the fan triggers.	Make sure the fan runs freely. Check the air-intake/air-discharge system. Let the device cool down.
12	KBL7 Hardware error Input-Controller	Mainboard defective.	Contact your customer service.
13	Maximum write cycle flash memory reached	Maximum write cycle flash memory reached.	Contact your customer service.
14	Error! SD card read error (CRC fault)	Update via SD card failed (CRC fault).	SD card check / replace.
15	Error! no access to the SD card	Update via SD card failed (access error).	SD card check / replace
17	Parameter storage not found, please connect and restart	Parameter storage not found, please connect and restart.	Check connector parameter storage. If necessary replace parameter storage.
18	Parameter storage no valid serial number	Parameter storage no valid serial number.	Contact your customer service.
19	CAN-BUS: Interior display V1 is incompatible	CAN-BUS operators incompatible.	Use CAN-BUS operaters V2.
20	CAN-BUS: preSelection display V1 is incompatible		
21	CAN-BUS: audio module full V1 is incompatible		
22	CAN-BUS: RGB module V1 ist incompatible		
23	Parameter storage write error	Parameter storage write error.	Check connector parameter storage. If necessary replace parameter storage.
24	Parameter storage read error	Parameter storage read error.	Check connector parameter storage. If necessary replace parameter storage.
25	Frequency detection: detection failed!	Frequency detection failed.	Restart the controller. Contact your customer service after the third unsuccessful restart.
26	Frequency detection: power supply connection faulty (connector X6/E6)!	Frequency detection failed. No mains voltage.	Check mainboard connector X6/E6.
28	Excess Temperature	Device is running at temperature limit	Close the door and let the device cool down. If the error repeats, contact your customer service.
29	Excess Temperature	Device exceeds the temperature limit	Close the door and let the device cool down. If the error repeats, contact your customer service.

INFORMATION MESSAGES			
No.	**Info. message**	**Description**	**Remedy**
203	Fill level aquaCool canister low	The content of the aquaCool canister is sufficient for another 2.5 hours of operation with a spraying time of 6 seconds each.	Replace the empty aquaCool canister with a full one. Do not replace aquaCool with any other liquid.
204	Connection aquaCool unit faulty	Communication between control and module / interior control panel has been interrupted.	Check / replace the patch cable. Acknowledge the message by pressing START. If the fault persists, contact your customer service.
205	Connection audio module faulty		
206	Connection inside display faulty		
207	aquaCool canister empty	aquaCool canister empty.	Replace the aquaCool canister with a full one. See chapter: Refilling Aroma and aquacool.
208	Aroma supply low, please renew	System has run out of scent.	Replace the Aroma tin. See chapter: Refilling Aroma and aquacool.
210	Low battery charge, please renew	Button cell (CR-2032) of the control board discharged.	Replace the button cell (CR-2032).
212	Connection RGB module faulty	Communication between control and bus module has been interrupted.	Check / replace the patch cable. Acknowledge the message by pressing START. If the fault persists, contact your customer service.
213	SD card missing	No SD card in the audio module.	Insert an original SD card. See chapter: Recording to an SD card/Removing the SD card.
214	SD card unreadable	SD card defective, incompatible content.	Insert a new original SD card. Acknowledge the message by pressing START. See chapter: Recording to an SD card/Removing the SD card. If the fault persists, contact your customer service.
216	Error voltage supply, please check	Power supply to the mainboard varies	Check power supply to the mainboard.
217	No voice files on the SD card, please check.	No voice files on the SD card found.	Rebuild voice folder on the SD card. If necessary replace original SD card.
218	Connection DALI-unit faulty.	DALI-unit - CAN-BUS connection lost.	Contact your customer service.
220	OW too many sensors	General OneWire sensor error.	Contact your customer service.
221	OW sensor Typ B missing		
222	OW sensor Typ S missing		
223	OW sensor read error		
224	Check tubes and temper-ature sensor in the door (delta>12) – correct please!	Temperature difference between the OneWire sensors too high.	Check tubes and thermal sensors in the door. Contact your customer service.
228	Check tubes and temper-ature sensor in the door	Minimum temperature is not reached or is fallen below in operation mode.	Check tubes and thermal sensors in the door. Contact your customer service.
229	Please close the door, check exhaust air	Temperature rise of 1,5 degrees in 18 seconds.	Close the door. Check air outlet.
230	Connection Bluetooth module faulty	Communication between control and Bluetooth module has been interrupted.	Check / replace the patch cable. Acknowledge the message by pressing START. If the fault persists, contact your customer service.
231	No display	Internal notification - stored in the error log (service technician information).	-

12. Technical Data

Ambient conditions		
Installation site	• In dry rooms (booths) with sufficient airing (intake and outlet) • Max. Relative air humidity: ≤ 70 % • Max. Room temperature: ≤ 30 °C (≤ 86°F)	• Minimum height of the room: 2480 mm (97,64 inch) - Applies to circulating-air mode and operation mode with optional central exhaust air system. • Only on a non-combustible basement • Maximum operating altitude: ≤ 6500 ft
Weights and measures		
Dimensions in inches (height x width x depth)	93,23 x 54,93 x 48,55 (closed) - (With central exhaust air module -> depth plus 13,07) 93,23 x 54,93 x 72,56 (opened)	
Weight	352 kg (~776.03 lbs) without central exhaust air module 392 kg (~864.21 lbs) with central exhaust air module	
Floor plate max. load capacity	330 lbs	
Electrical connection values		
Protective class	IP 20	
Mains voltage	3-phase operation: 3x 220 V / ~ / 60 Hz - 2-phase operation: 2x 220 V / ~ / 60 Hz	
Wire cross section	3-phase operation: 4x AWG8 - 2-phase operation: 3x AWG4 THHN cable in an isolation tubing (e.g. flexible metallic conduit, utilizing appropriate connectors)	
Fuses	3-phase operation: 3x 40 A / 2-phase operation: 2x 63 A For Canada, all tanning devices must be equipped with a Class-A ground fault circuit interrupter (GFCI).	
MP3 player	• Supports SD cards up to 1-2 GB (SD) / 4-16 GB (SDHC) • Supported file system (SD card): FAT16, FAT32 • Supported MP3 files: constant and variable bit rate, 96-320 Kbit/s	
Nominal power	9100 W	
Exhaust air mode Connection to exhaust air systems only with original KBL central exhaust air module (optional feature)!		
Fan / blower	Minimum air outlet flow rate: 528344 gal/h Air outlet socket - Diameter 300 mm (~11.811 inch).	
Air outlet duct hose	Diameter 300 mm (~11.81 inch).	

Unit data: KBL Tower pureEnergy 5.0 (T5213)	
Tubes	52x pureSunlight 2052 R 200W - Item no: 3230036110

Unit data: KBL Tower pureEnergy 5.0 hybridSun (T5213)	
Tubes	26x pureSunlight 2052 R 200W - Item no: 3230036110 26x smartSunlight 2025 R 200W - Item no: 3230076262

12.1 Dimensions and distances

DIMENSIONS

Front view

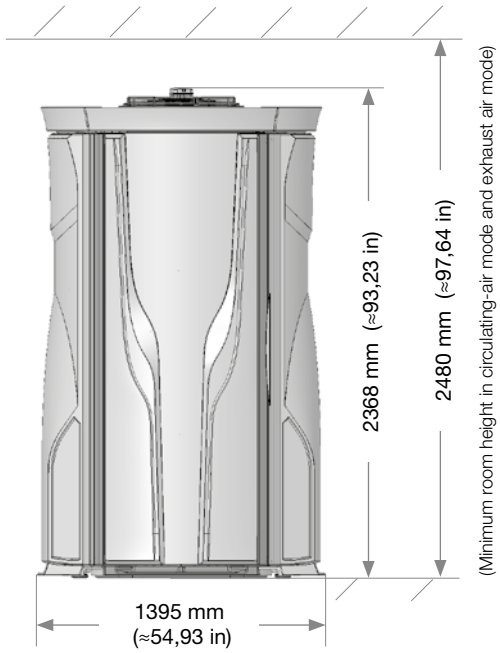

RHS view, door opened

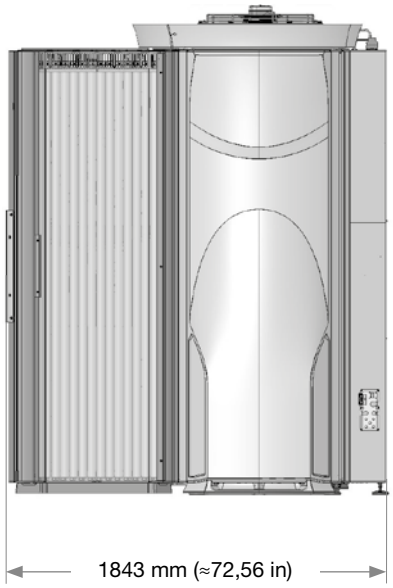

Top view

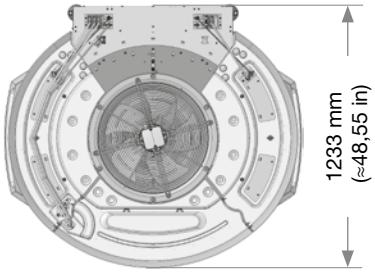

RHS view with central exhaust air module

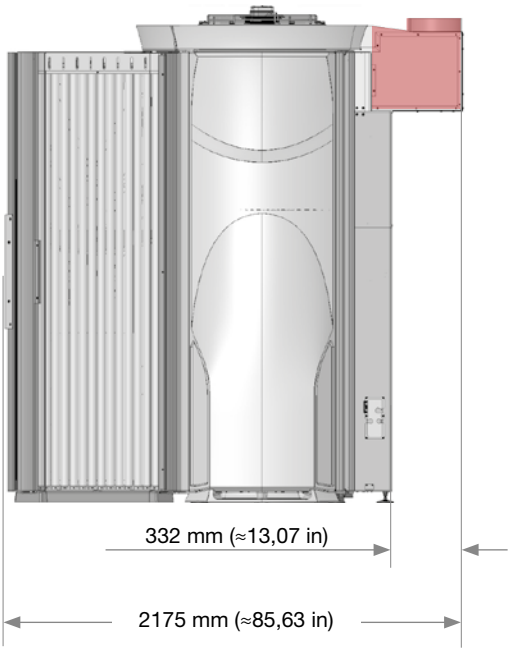

DISTANCES

Distances apply to tanning devices with and without central exhaust air module.

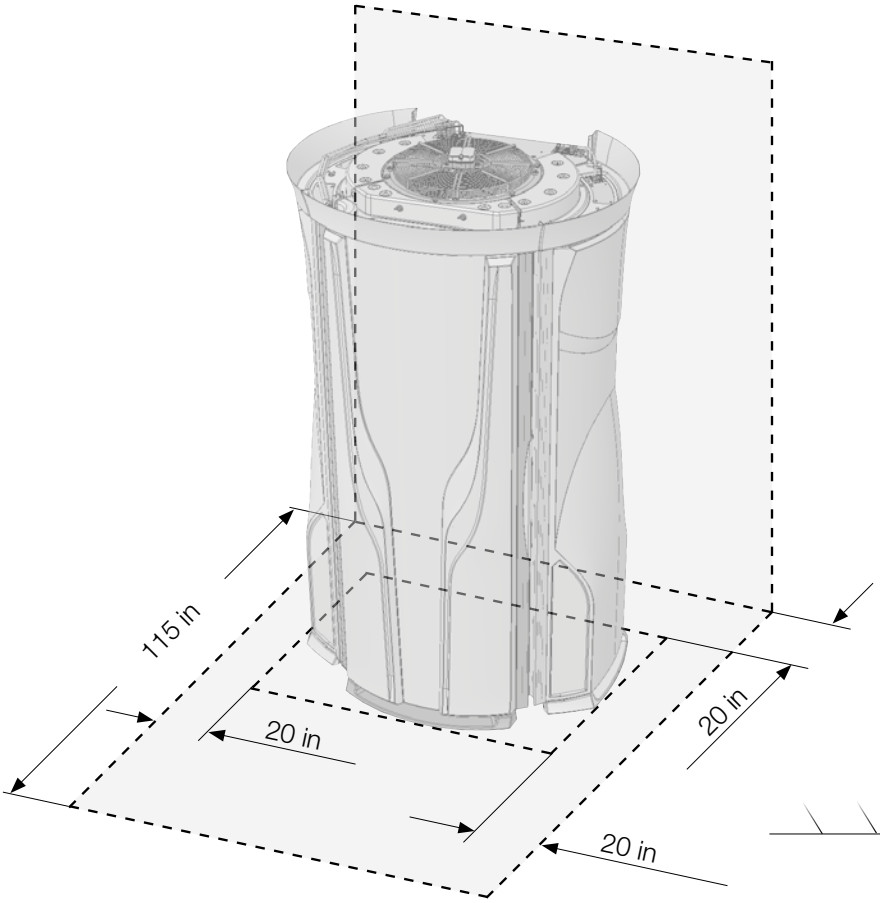

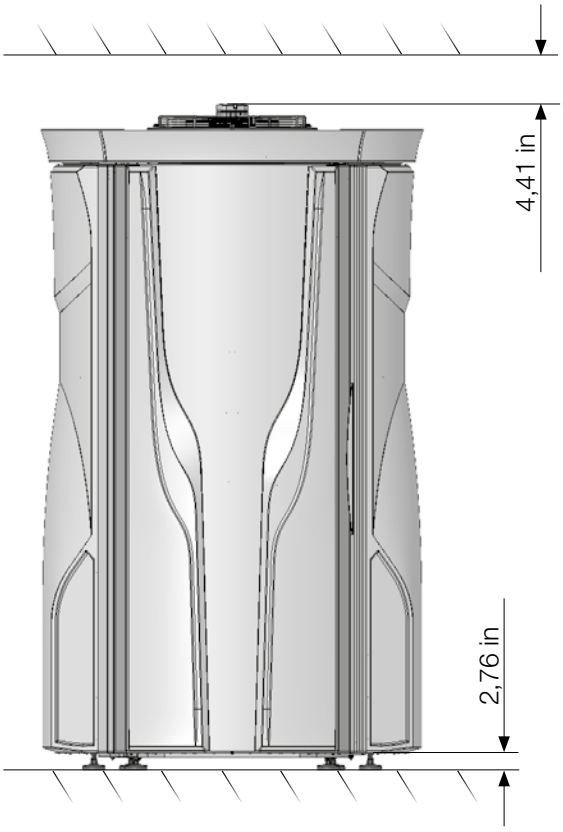

13. IMPLIED WARRANTY



1. **WARRANTY** - Laundries unlimited of Indiana, Inc., dba Tanning Supplies unlimited (the "Company") warrants that electrical components are free from defects in its materials and workmanship, under normal use, for one year ("Warranty Period") beginning from the purchase invoice date of the KBL indoor tanning device ("Product") is purchased from the Company or an authorized Distributor of the Company or from an authorized Dealer or Representative of such Distributor or Dealer (collectively the "Distributor"), if you, the original purchaser ("Purchaser"), retain ownership during the Warranty Period. This Warranty is nontransferable. THE WARRANTY CONTAINED IN THIS SECTION 1 IS SUBJECT TO VOIDANCE IN ACCORDANCE WITH SECTION 3.

2. **WARRANTY FOR ITEMS NOT COVERED BY THE ONE YEAR WARRANTY SET FORTH IN SECTION 1; Acrylics, lamps, lamp starters, filter glass plates, metal structure, plastic covers and air filters** are not covered under this warranty. THE WARRANTY CONTAINED IN THIS SECTION 2 IS SUBJECT TO VOIDANCE IN ACCORDANCE WITH SECTION 3.

3. **VOIDANCE OF THE WARRANTY.** THE WARRANTIES SET FORTH IN SECTIONS 1 AND 2 HEREIN ABOVE ARE VOID IF YOU: TRANSFER THE PRODUCT TO A THIRD PARTY, MODIFY THE PRODUCT, MISUSE THE PRODUCT, SUBJECT THE PRODUCT TO ABNORMAL CONDITIONS OF OPERATION, ATTEMPT UNAUTHORIZED REPAIRS TO THE PRODUCT, DO NOT USE ORIGINAL EQUIPMENT MANUFACTURER (OEM) REPLACEMENT PARTS, DO NOT FOLLOW THE CARE AND USE INSTRUCTION MANUAL CONCERNING SPACE, ELECTRICAL AND ENVIRONMENTAL REQUIREMENTS, SUBJECT THE PRODUCT TO ACCIDENT, MISUSE OR MISAPPLICATION; OR SERVICE THE PRODUCT BY ANYONE OTHER THAN THE COMPANY OR AN AUTHORIZED SERVICE REPRESENTATIVE OF THE COMPANY OR DISTRIBUTOR

4. **WARRANTY RETURNS.** All warranty claims can be handled through the Company or Distributor. If you do not know the phone number of the Distributor, you can contact the Company at 1-877.307.8434 (toll free) or 317.217.1700 Monday through Friday from 9:00 AM to 5:00 PM EST. Warranty covered items are to be returned on a part for part replacement. All freight charges are the sole responsibility of the Purchaser.

5. **DISTRIBUTOR WARRANTIES.** To the extent representations, warranties or commitments are extended to the Purchaser by a Distributor, such representations, warranties and commitments will be those of the Distributor alone, and will not be attributed to the Company and the Company shall not be responsible for same.

6. **DISCLAIMER OF WARRANTIES.** EXCEPT AS EXPRESSLY STATED IN SECTION 1 AND 2 HEREIN ABOVE, THERE ARE NO OTHER WARRANTIES BY THE COMPANY OR DISTRIBUTOR, EXPRESSED OR IMPLIED, BY OPERATION OF LAW OR OTHERWISE. THE COMPANY AND DISTRIBUTOR DISCLAIM ALL IMPLIED AND EXPRESSED WARRANTIES, INCLUDING BUT NOT LIMITED TO ANY IMPLIED WARRANTY OF MERCHANTABILITY OR FITNESS FOR A PARTICULAR PURPOSE.

7. **LIMITATION OF LIABILITY.** THE COMPANY OR DISTRIBUTOR SHALL NOT BE LIABLE, WHETHER IN CONTRACT OR TORT, FOR ANY LOSS OR DAMAGE, INCLUDING BUT NOT LIMITED TO SPECIAL, INDIRECT, CONSEQUENTIAL, PROPERTY, ECONOMIC OR PERSONAL DAMAGES OF THE END USER, OR THIRD PARTIES, EVEN IF ADVISED OF THE POSSIBILITIES OF SUCH DAMAGES, ABOVE OR BEYOND THE REPAIR, REPLACEMENT OR REFUND OF ANY DEFECTIVE PRODUCT, WHICH SHALL BE THE PURCHASER'S SOLE REMEDY. THE PURCHASE PRICE OF THE PRODUCT IS A CONSIDERATION IN LIMITING THE COMPANY'S AND DISTRIBUTOR'S LIABILITY.

8. **LOCAL LAWS.** Laws pertaining to the rights and limitations of the Warranty vary from state to state. The limitations set forth herein may not be applicable to the Purchaser, or Purchaser may have other legal rights not referenced herein.

9. **MISCELLANEOUS**

   9.1 GOVERNING LAW. This Warranty shall be governed by, interpreted by and enforced in accordance with the substantive and procedural laws of the State of New Jersey, and the United States of America, conflict of laws notwithstanding. This Warranty and any such claims, disputes or actions is domiciled. The Company, Distributor and Purchaser hereby agree to submit to the subject matter and personal jurisdiction and venue of said courts to resolve any disputes. If any term or provision of this Warranty is adjudicated to be invalid by any Court have jurisdiction, such provision shall be inoperable and deemed omitted and shall not invalidate the remaining provisions hereof.

   9.2 ENTIRE AGREEMENT. This Warranty constitutes the entire agreement of the Purchaser, the Distributor and the Company as to the subject matter and there are no other understandings, agreements or terms, whether oral or written, between the Company and the Purchaser.

   9.3 READ AND UNDERSTAND THIS WARRANTY. Before signing and returning this warranty, the Purchaser acknowledges that Purchaser has read and understands the terms herein, or has had the opportunity to have them read and explained to the Purchaser by an authorized representative.

10. **VALIDATION.** To validate that you are the original purchaser of the Product from the Company or a Distributor and to ensure that you receive the above-recited benefits under the Warranty, please provide the information on the warranty card, sign the card and mail it within (30) days of purchase to:

    Warranty Department
    Laundries unlimited of Indiana, Inc.
    dba Tanning Supplies unlimited.
    1504 Sadlier Circle South Drive;
    Indianapolis; IN 46239, U.S.A.

11. **SPARE AND REPLACEMENT PARTS.** Original Equipment Manufacturer's (OEM) lamps and replacement parts are available by direct order. To order, call 1-877.307.8434 (toll free) or 317.217.1700. Please have Credit Card information available when calling or write to:

    Laundries unlimited of Indiana, Inc.
    dba Tanning Supplies unlimited.
    1504 Sadlier Circle South Drive;
    Indianapolis; IN 46239, U.S.A.

14. WARRANTY CARD

KBL Tower pureEnergy 5.0
PRODUCT LINE

warranty card	Company Name/Contact:	
Delivery Address	Street: _____ City, State: _____ Zip Code: _____ Phone: _____	
Model	o KBL pureEnergy 5.0 / o KBL pureEnergy 5.0 hybridSun	
Serial #		
ACS	o Yes	o No
aquaCool	o Yes	o No
megaVoice	o Yes	o No
Mp3-Sound-Box	o Yes	o No
Exhaust air system	o Without o Air outlet duct o Air outlet duct hose (300mm, white, length 3m, 2 hose clamps)	
Bluetooth	o Yes	o No
Mains voltage	o 3-phase o 2-phase	
Date of Install		
Installer Name and Address		
Voltages	L1/L2 _____ L2/L3 _____ L3/L1 _____	
Remarks		

Office Use Only: Date Received: _____ Received by: _____

Remarks

Remarks

Remarks

Remarks

KBL

The Beauty & Health Company



Ringstraße 24-26
56307 Dernbach / Germany
fon: +49 (0) 26 89.94 26-0
fax: +49 (0) 26 89.94 26-66